Swing Gate Opener
User Manual

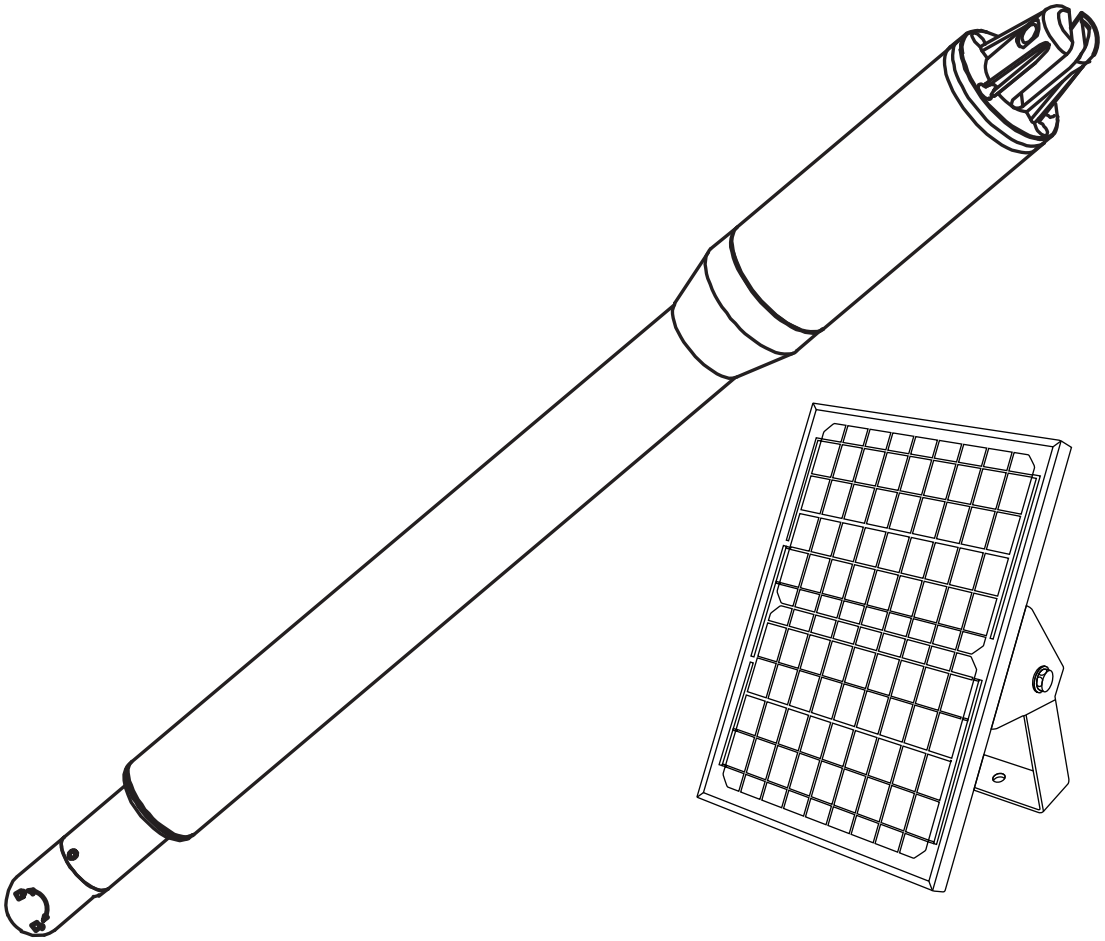

Model: PKM-C01-300-1

★ Thank you for purchasing this product. If you have any questions or comments, contact us at **JUJIANGservice@outlook.com**
Please attach photos/videos for faster fault diagnosis.

★ Please read and follow all warnings, precautions and instructions before installation and using

★ Periodic checks of the opener are required to ensure safe operation

★ Keep the manual for future reference

CONTACT US

For sales, product, installation information:
Email: JUJIANGservice@outlook.com

Please prepare the following information:
product model, purchase date & purchase site,
order number and your contact information.
All your concerns will receive a reply.

Table of Contents

Safety Installation Information ····· 1-2

Single/Dual Swing Gate Opener Part List ····· 3-4

Technical Specification ····· 5

Installation ····· 6
- Installation Overview ····· 6
- Dual Gate Overview ····· 6
- Installation Step ····· 7-14

Mounting & Wiring The Control Box ····· 14
- Motor Wiring ····· 15
- Power Supply ····· 16
- Accessories Wiring ····· 22

How to Program or Erase The Remote ····· 24

Function Description of the Control Board ····· 25

Control Board Parameters Setting ····· 27

Reset The System ····· 30

How to Operate ····· 30

Warranty Ordinance ····· 30

Trouble Shooting ····· 31

Safety Installation Information

Caution
If you use it for a single door, please connect the Motor 2 only. At the same time, the PG mode of the control panel menu needs to be set to 1 (single motor).Please reference the page 21 and 28 to do it.

1. READ and FOLLOW all instructions.
2. The gate opener is intended for use with class I vehicular swing gates.
   Class I denotes vehicular gate opener (or system) dwellings, or a garage or parking area associated therewith.

   Install the gate opener only when the opener is appropriate for the construction and the usage class of the gate.
3. Gate opening system designers, installers and users must take into account the possible hazards associated with each individual application. Improperly designed, installed or maintained systems can create risks for the user as well as the bystander. Gate system design and installation must reduce public exposure to potential hazards. All exposed pinch points must be eliminated or guarded.
4. A gate opener can create high levels of force during normal operation. Therefore, safety features must be incorporated into every installation. Specific safety features include safety sensors.
5. The gate must be properly installed and work freely in both directions prior to the installation of the gate opener.
6. The gate must be installed in a location so that enough clearance is provided between the gate and adjacent structure when opening and closing to reduce the risk of entrapment. Swinging gates shall not open into public access areas.
7. The opener is intended for use only on gates used for vehicles. Pedestrians must be supplied with a separate access opening. The pedestrian access opening shall be designed to promote pedestrian usage. The pedestrian access shall be located such that persons will not come in contact with the moving vehicular gate.

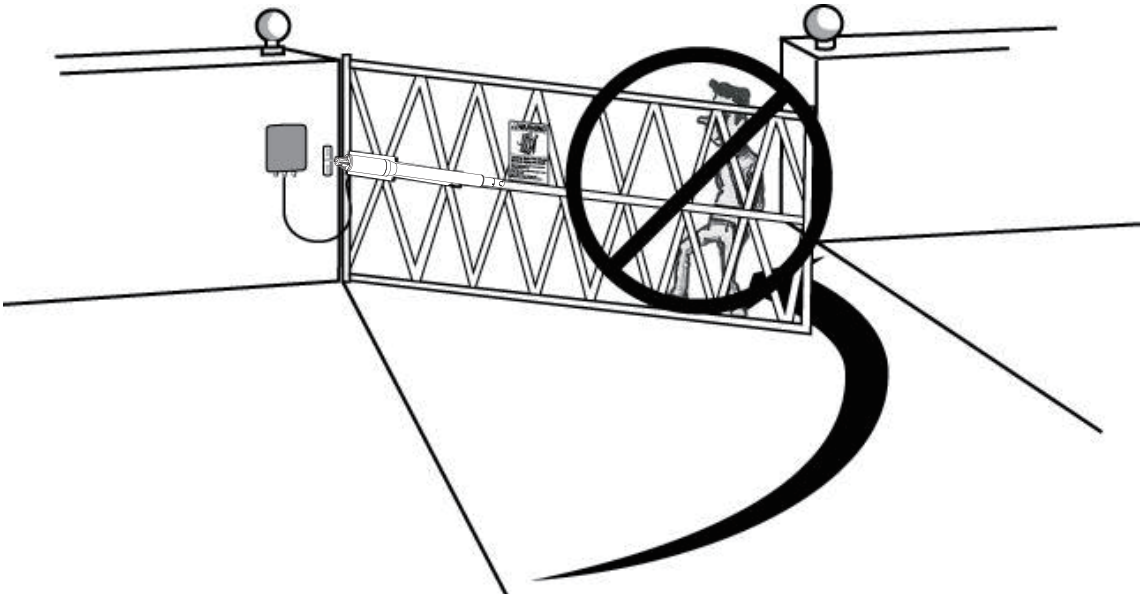

8. Pedestrians should never cross the pathway of a moving gate. The gate opener is not acceptable for use on any pedestrian gate. Pedestrians must be supplied with separate pedestrian access.

9. For an installation utilizing non-contact sensors, see the product manual on the placement of non-contact sensors (safety sensors) for each type of application.

a. Care shall be exercised to reduce the risk of nuisance tripping, such as when a vehicle trips the safety sensor while the gate is still moving.

b. One or more non-contact sensors (safety sensors) shall be located where the risk of entrapment of obstruction exists, such as the perimeter reachable by a moving gate or barrier.

10. Never mount any device that operates the gate opener where the user can reach over, under, around or through the gate to operate the controls. Controls are to be placed at least 6' (1.8m) from any part of the moving gate.

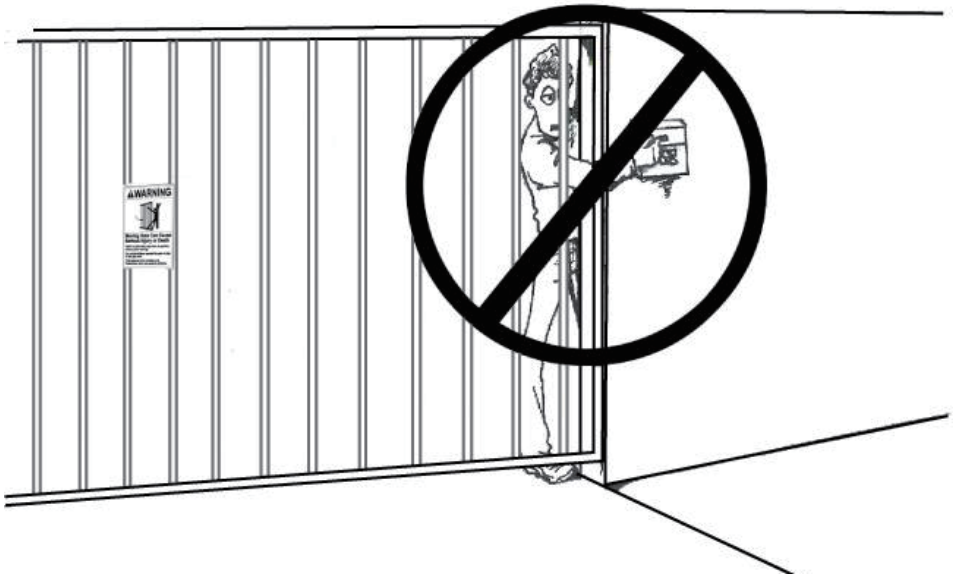

11. Controls intended to be used to reset an operator after 2 sequential activations of the entrapment protection device or devices must be located in the line of sight of the gate, or easily accessible controls shall have a security feature to prevent unauthorized use. Never allow anyone to hang pon or ride the gate during the entire travel of the gate.

12. All warning signs are placards must be installed where visible in the area of the gate.

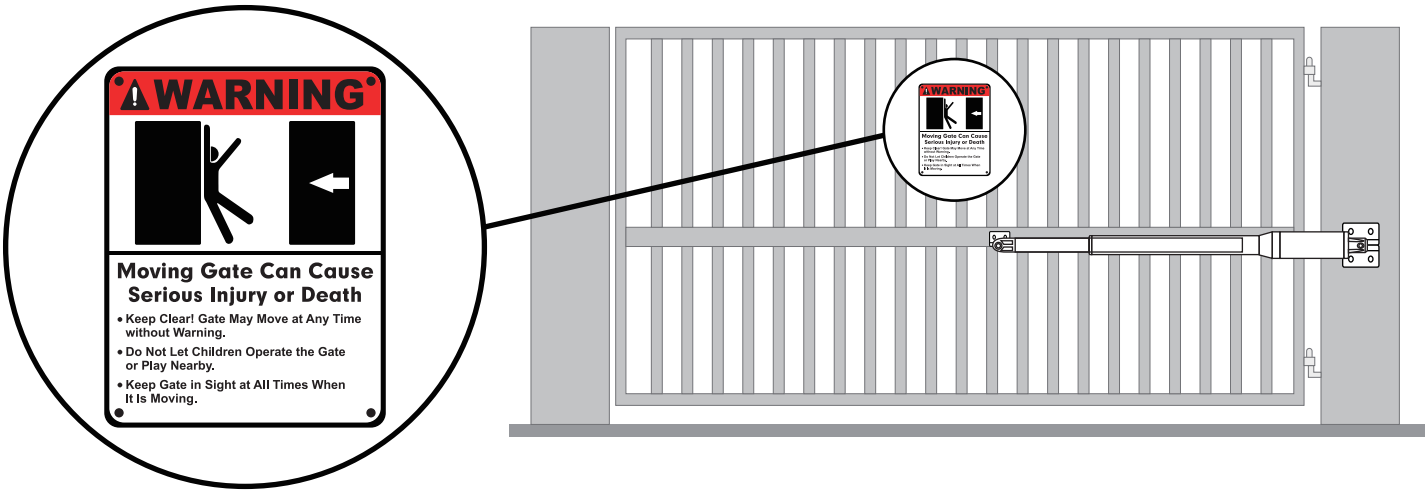

13. To AVOID damaging gas, power, or other underground utility lines, contact underground utility locating companies BEFORE digging.

Single Swing Gate Opener Part List

(A)

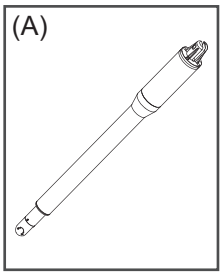

Gate Opener
1 pc

(B)

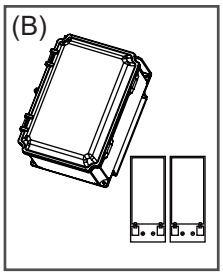

Control Box
1 pc

(C)

Control Box Screws Pack

(D)

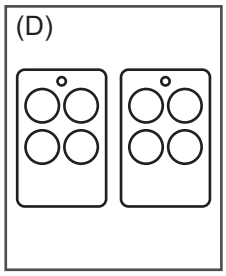

Remote Control
2 pcs

(E)

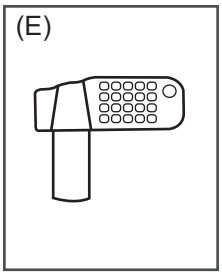

Manual Release
Key 1 pc

(F)

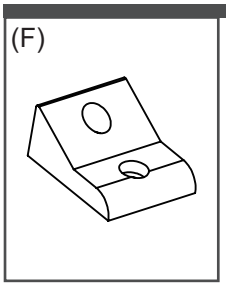

Limit Stop
1 pc

(G)

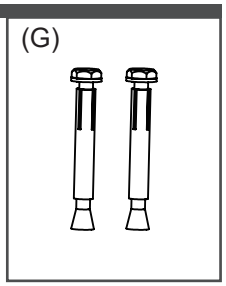

Limit Stop
Screw 2 pcs

(H)

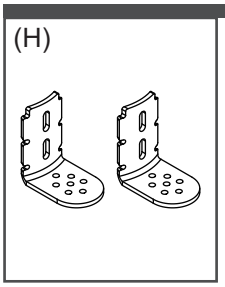

Post
Bracket 2 pcs

(I)

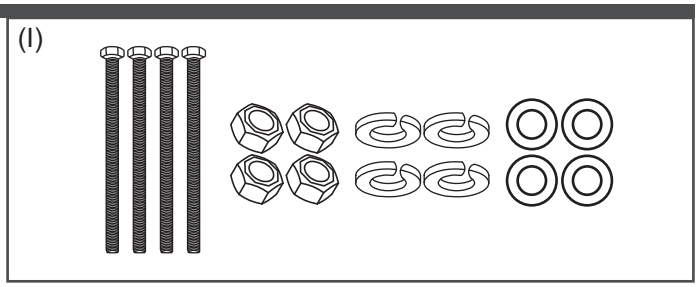

M10*150 Bolts, Nuts, & Washers 4 pcs

(J)

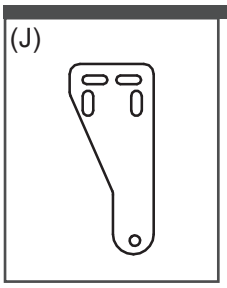

Post Pivot Bracket
1 pc

(K)

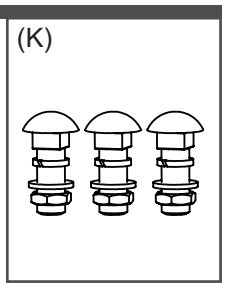

M8*30 Bolts, Nuts,
& Washers 3 pcs

(L)

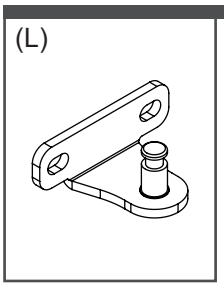

Gate
Brackets 1 pc

(M)

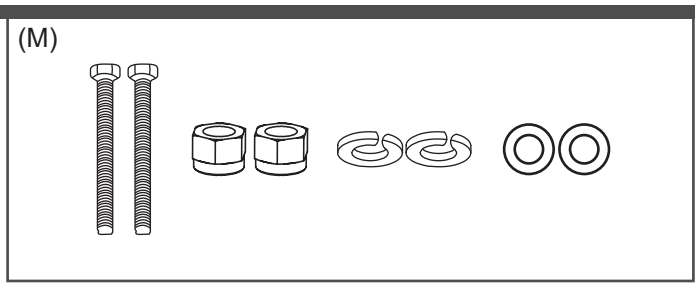

M8*70 Bolts, Nuts, & Washers 2 pcs

(N)

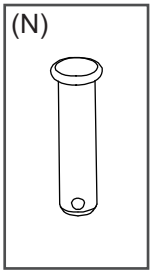

Clevis Pin
1 pc

(O)

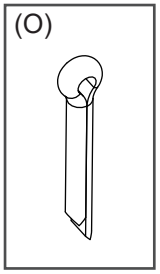

Hairpin Clip
1 pc

(P)

Warning Sign
1 pc

(Q)

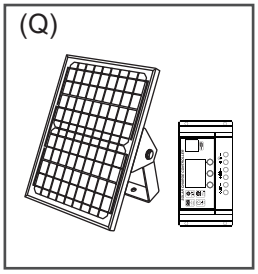

Solar Controller
1 pc

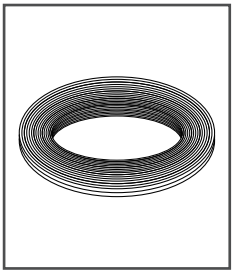

6 Feet cable

• Optional Accessories Parts List

Buy all accessories from designated store to avoid incompatibility.

Wireless Keypd

Safety Beam

Electric Lock

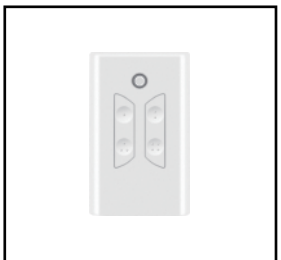

WiFi Remote

Dual Swing Gate Opener Part List

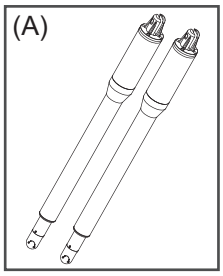

Gate Opener
2 pcs

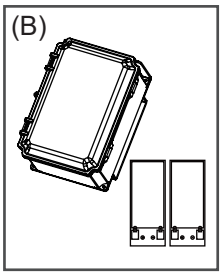

Control Box
1 pc

Control Box Screws Pack

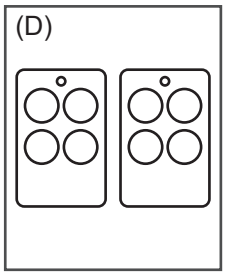

Remote Control
2 pcs

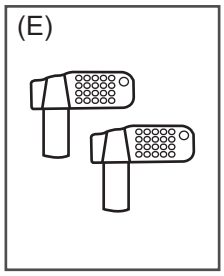

Manual Release
Key 2 pcs

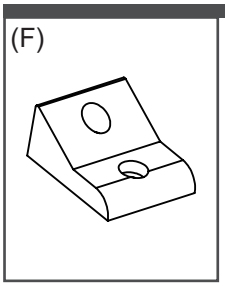

Limit Stop
1 pc

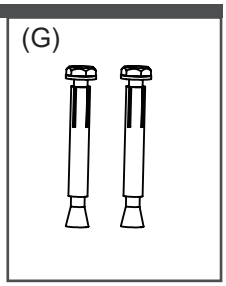

Limit Stop
Screw 2 pcs

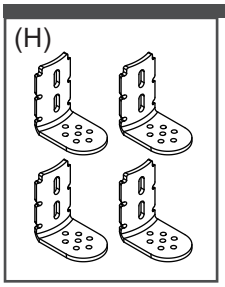

Post
Bracket 4 pcs

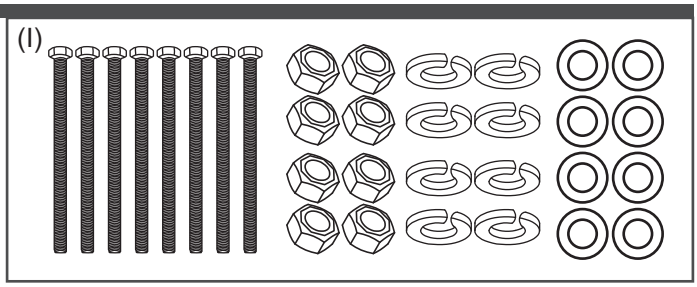

M10*150 Bolts, Nuts, & Washers 8 pcs

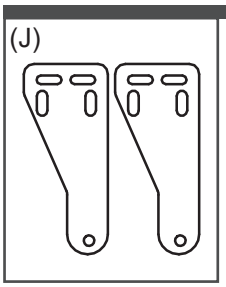

Post Pivot Bracket
2 pcs

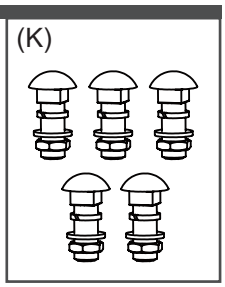

M8*30 Bolts, Nuts,
& Washers 5 pcs

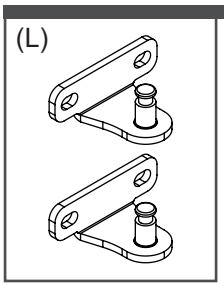

Gate
Brackets 2 pcs

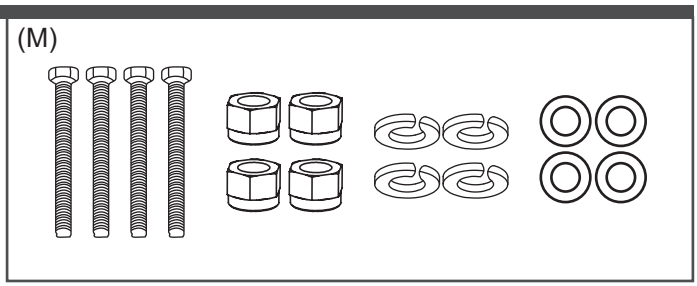

M8*70 Bolts, Nuts, & Washers 4 pcs

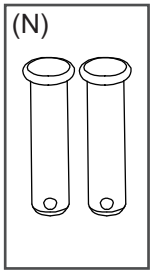

Clevis Pin
2 pcs

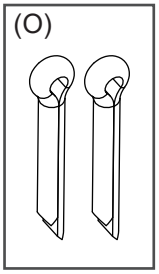

Hairpin Clip
2 pcs

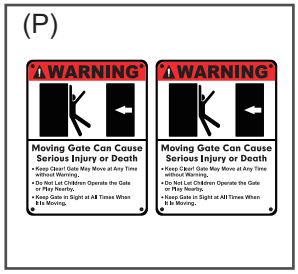

Warning Sign
2 pcs

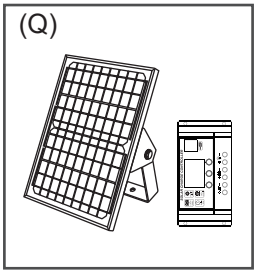

Solar Controller
1 pc

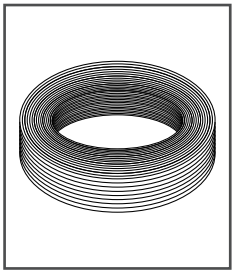

26 Feet Cable

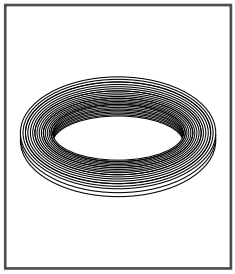

6 Feet cable

• Optional Accessories Parts List

Buy all accessories from designated store to avoid incompatibility.

Wireless Keypd

Safety Beam

Electric Lock

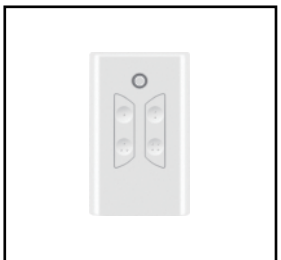

WiFi Remote

• Tools Required

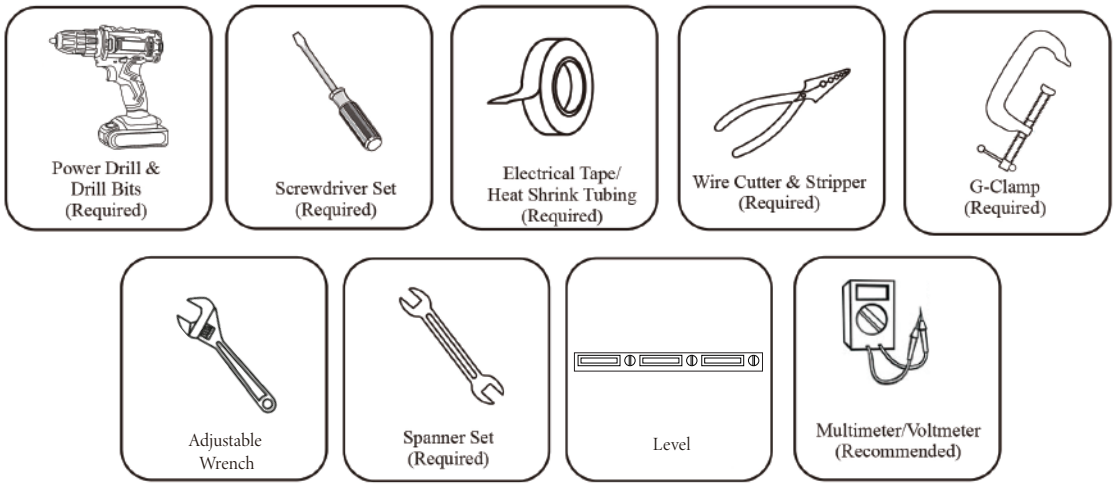

Technical Specification

Specifications	
Input power	110V AC
Motor voltage	24V DC
Power	40W
Actuator speed	1.6 cm/s
Max. Actuator travel	300mm
Max single-leaf weight	200KG
Max single-leaf length	1.2~4.3 meters
Ambient Temperature	-22°C ~ +55°C
Protection class	IP55
Max Gate Opening Angel	110°

Gate Weight (per leaf)	200KG(440lbs)	✔	NR	NR	NR	NR
	160KG(350lbs)	✔	✔	NR	NR	NR
	110KG(240lbs)	✔	✔	✔	NR	NR
	70KG(150lbs)	✔	✔	✔	✔	NR
	50KG(100lbs)	✔	✔	✔	✔	✔
		1.2-1.8M(4'-6')	2.4M(8')	3M(10')	3.6M(12')	4.3M(14')

Installation

• Installation Overview

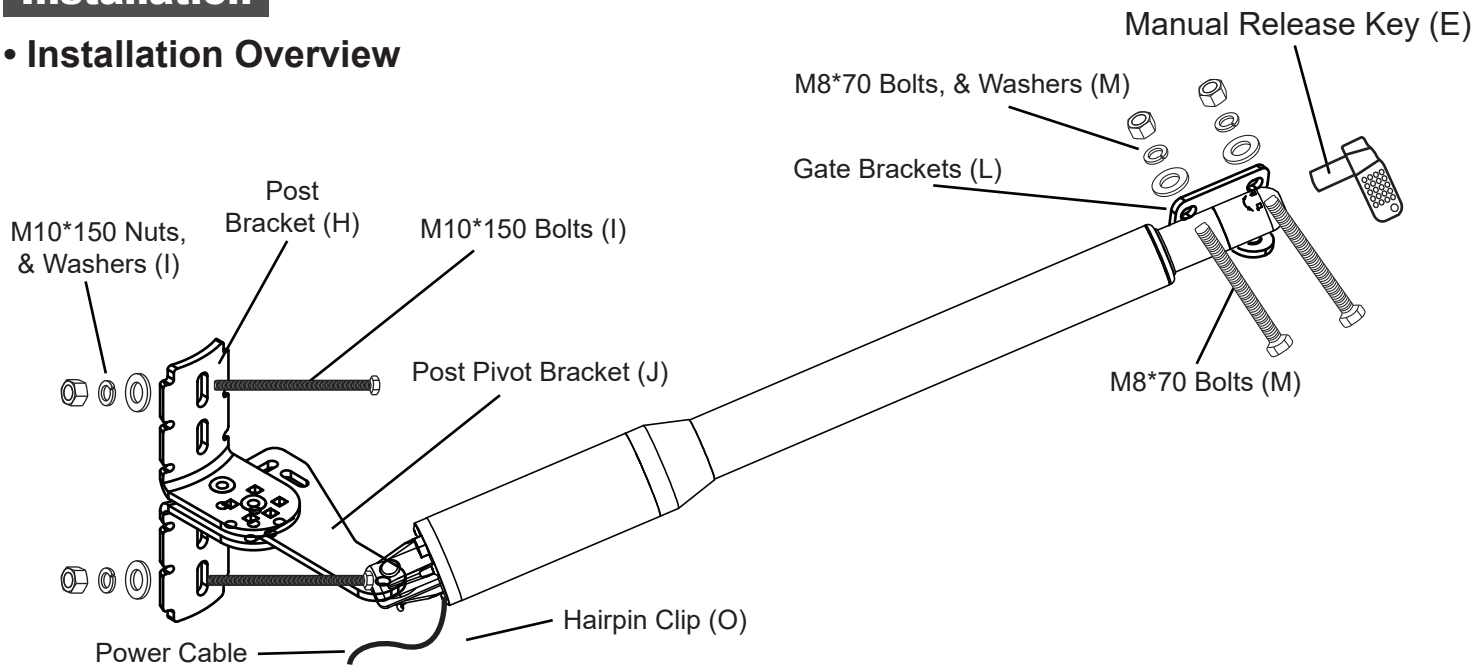

• Dual Gate Overview

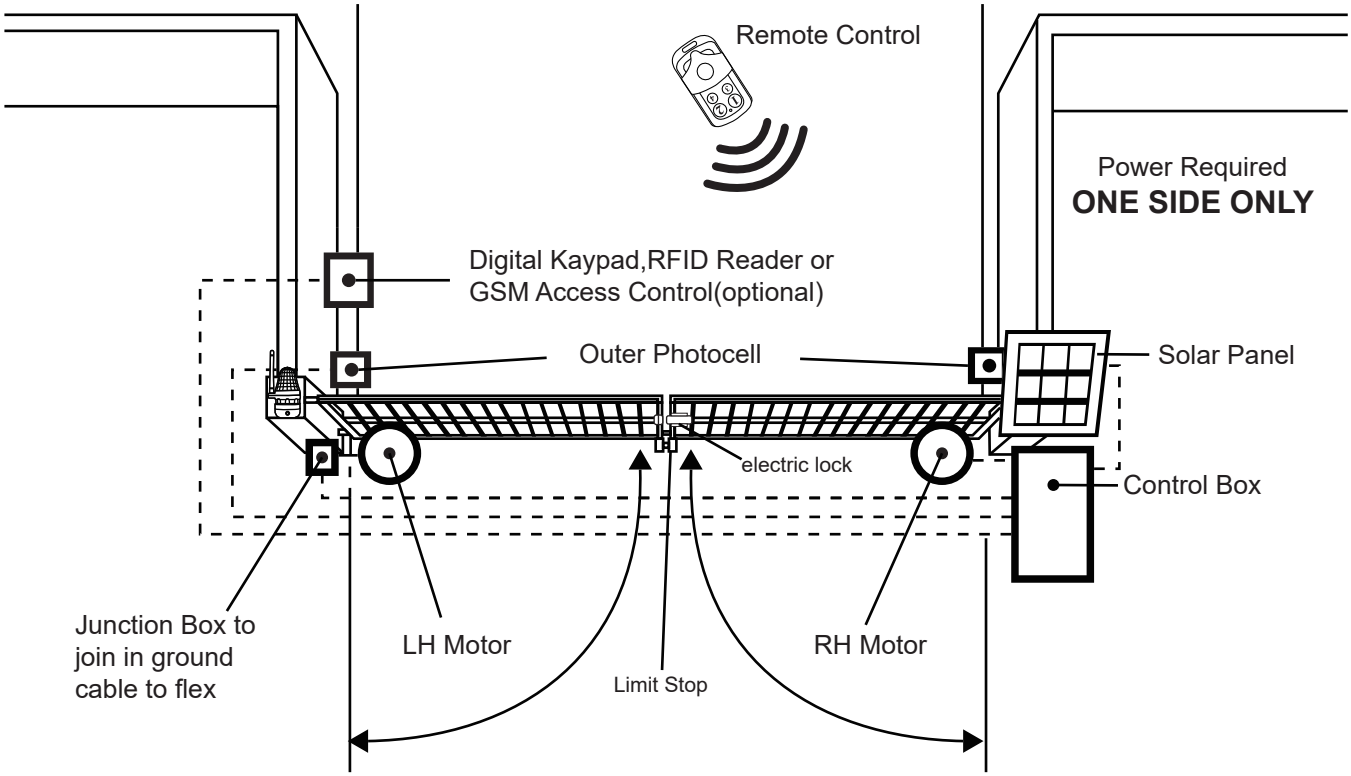

Photocell Beam System，Warning Sign，Flash Lamp，Solar Panel，
Gate Opener (Gate 2) (Left)，Electric Lock，Gate Opener (Gate 1) (Right)，Limit Stop

Important:
The gate opener cable should be put into the PVC conduit(not provided) which is buried underground. This protects the cable from lawn mowers and string trimmers.

• Installation Step

There are two installation types for the gate opener, check for Proper Gate Installation & Direction of Gate.

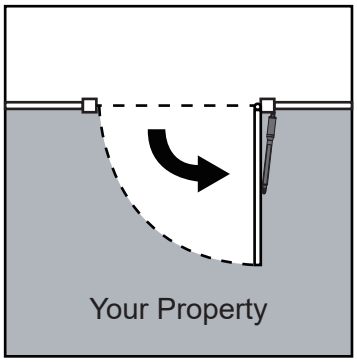

Pull-to-Open Option

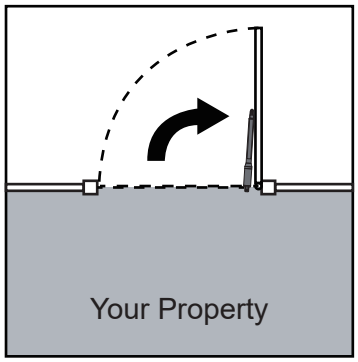

Push-to-Open Option

NOTE: Ensure the gate does not open into public areas.

Step 1.

Ensure that the Post Bracket (H) height is in the same exact level with the Gate Bracket (L) height. **Failing to ensure accurate common heights will cause the motor arm to bend leading to failure. Also.the force to push or pull the gate will be be reduced causing the motor to open or close the gates withdifficulty or may not operate successfully at all. Severe different in height will damage the motor and the motor arm.**

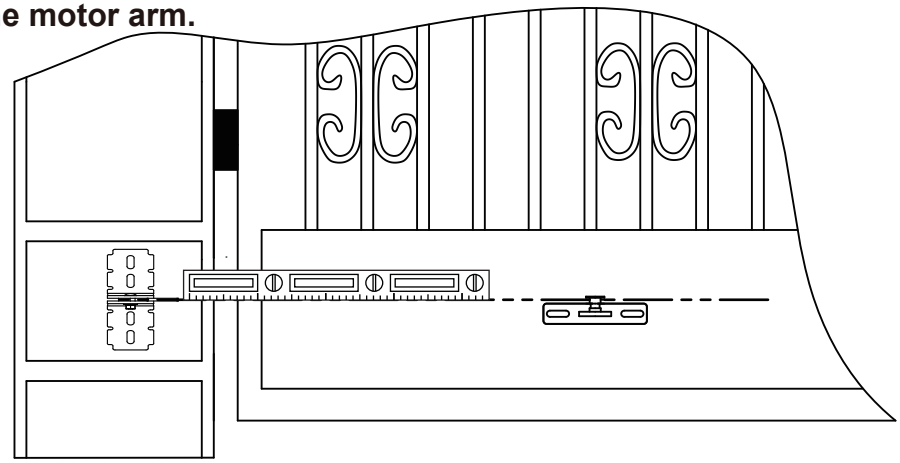

Before installation, please make sure that there is no obstruction during the opening and closing process of the gate and that the gate can be opened and closed smoothly.

Step 2. Front and Post Bracket Installation

Insert the M8*30 Bolts, Nuts & Washers (K) through the center hole of the Post Pivot Bracket (J) and Pivot Arc Bracket (H) as shown. Place the washer, nut on the bottom of the bolt and hand tighten.

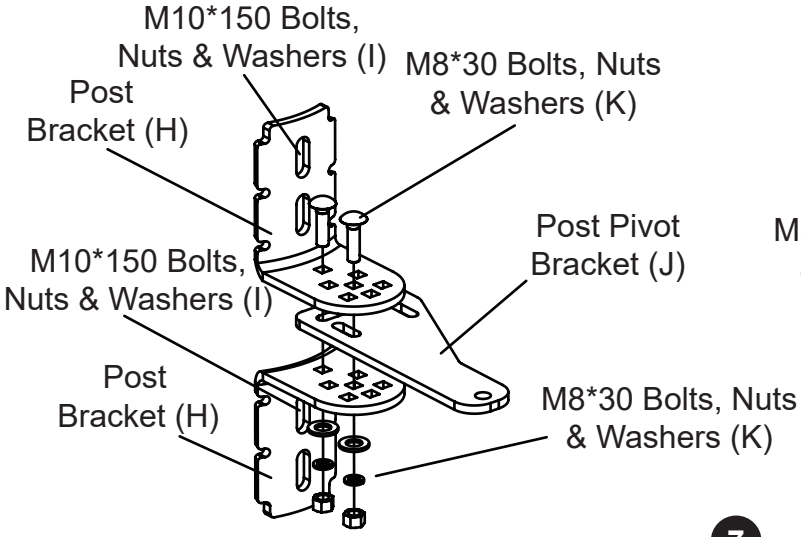

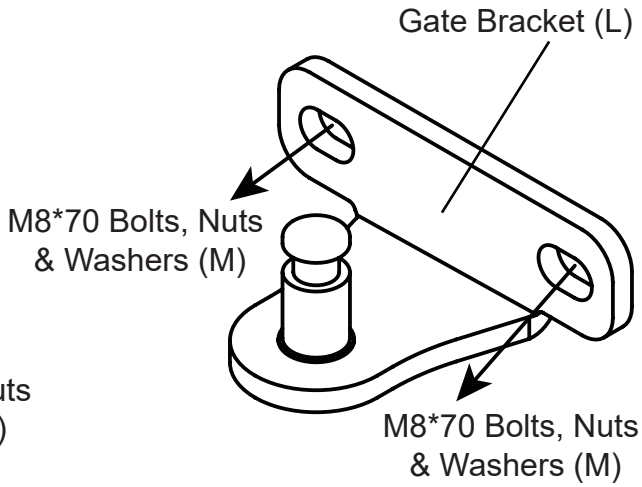

Step 3. Install the Motor Fixed-End to the Gate Post-Bracket

(1). Attached the Gatet Bracket (L) and Post Pivot Bracket (J) assembly to the opener by inserting a Clevis Pin (N). Secure the clevis pins using the Hairpin Clips (O).

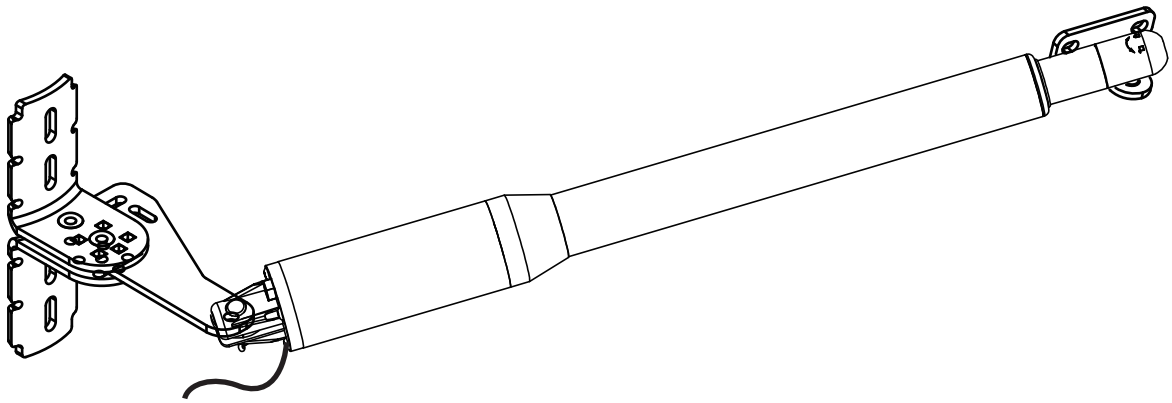

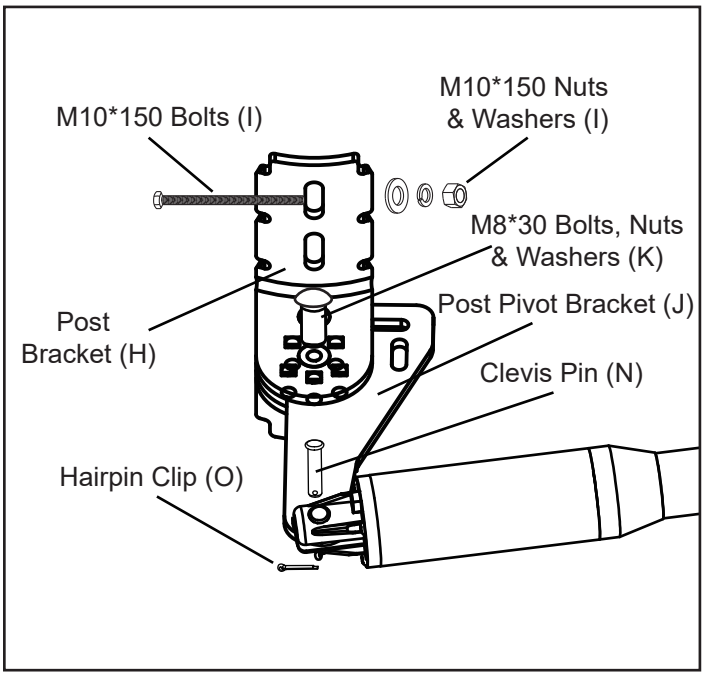

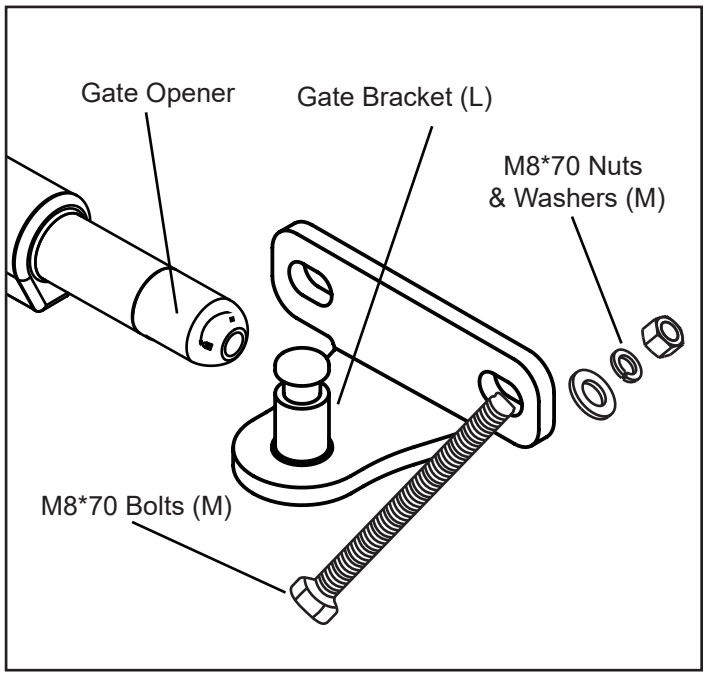

(2). Open the release hole plug on the top of the gate opener, insert the release key, and turn the key 90°clockwise. This releases the motor and allows the push-pull rod to be manually extended and retracted. To restore normal operation, turn the key 90°counter clockwise.
Please rotate the telescopic rod manually and pull it outward or push it inward.

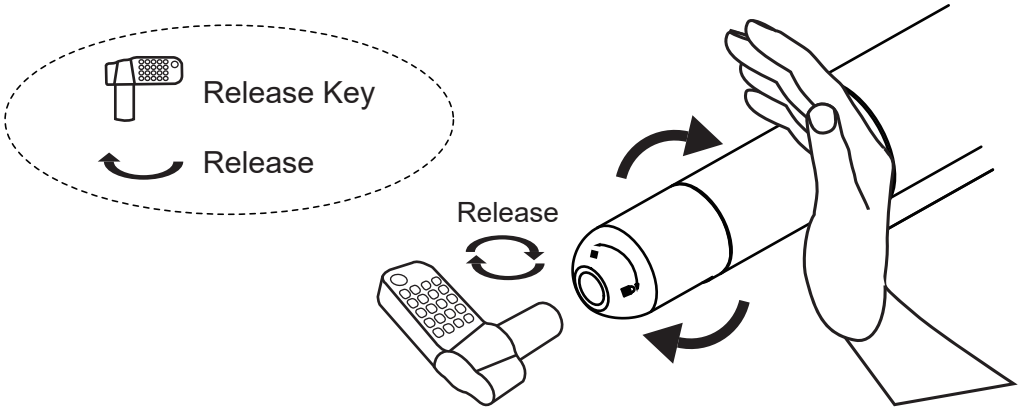

Step 4. There are two installation types for the gate opener, check for Proper Gate Installation & Direction of Gate.

Pull-To-Open Installation Mode:

The installation position of the bracket is very important. Please refer to the figure to measure according to the angle you need to open. Unit: mm (for example: A is 100mm, B is 187mm. At this time, the maximum opening angle of the gate is 90°), determine the center point of the shaft and mark it.

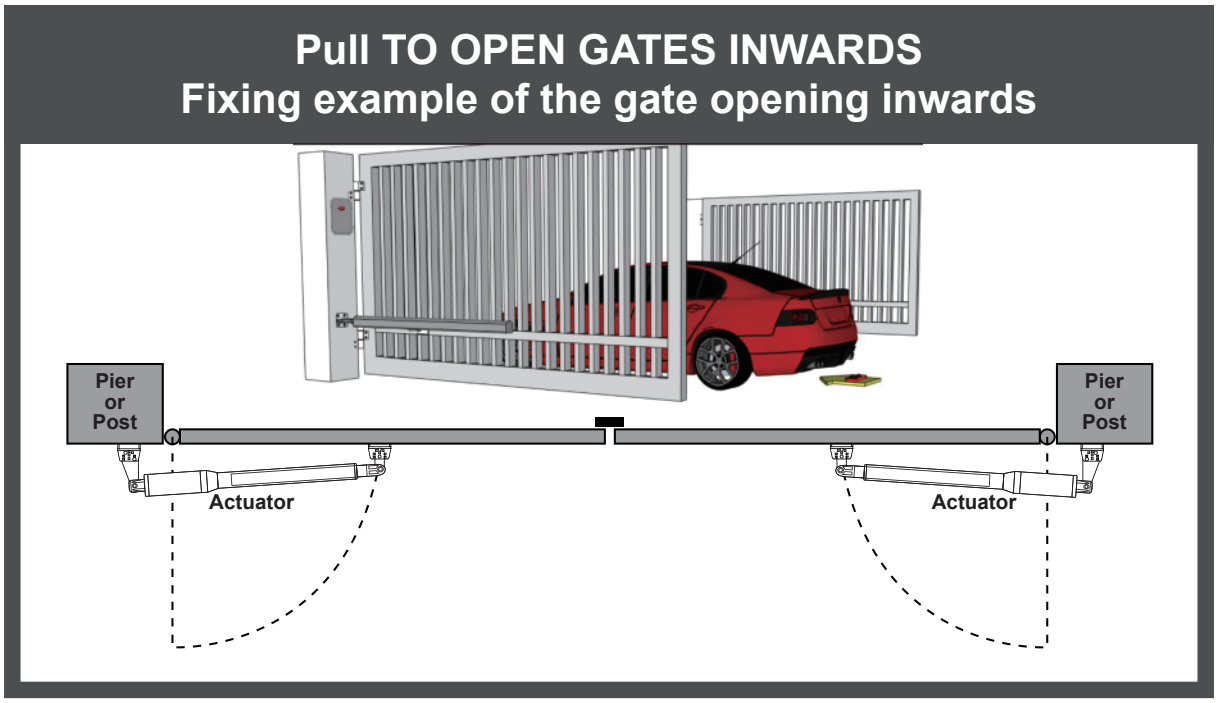

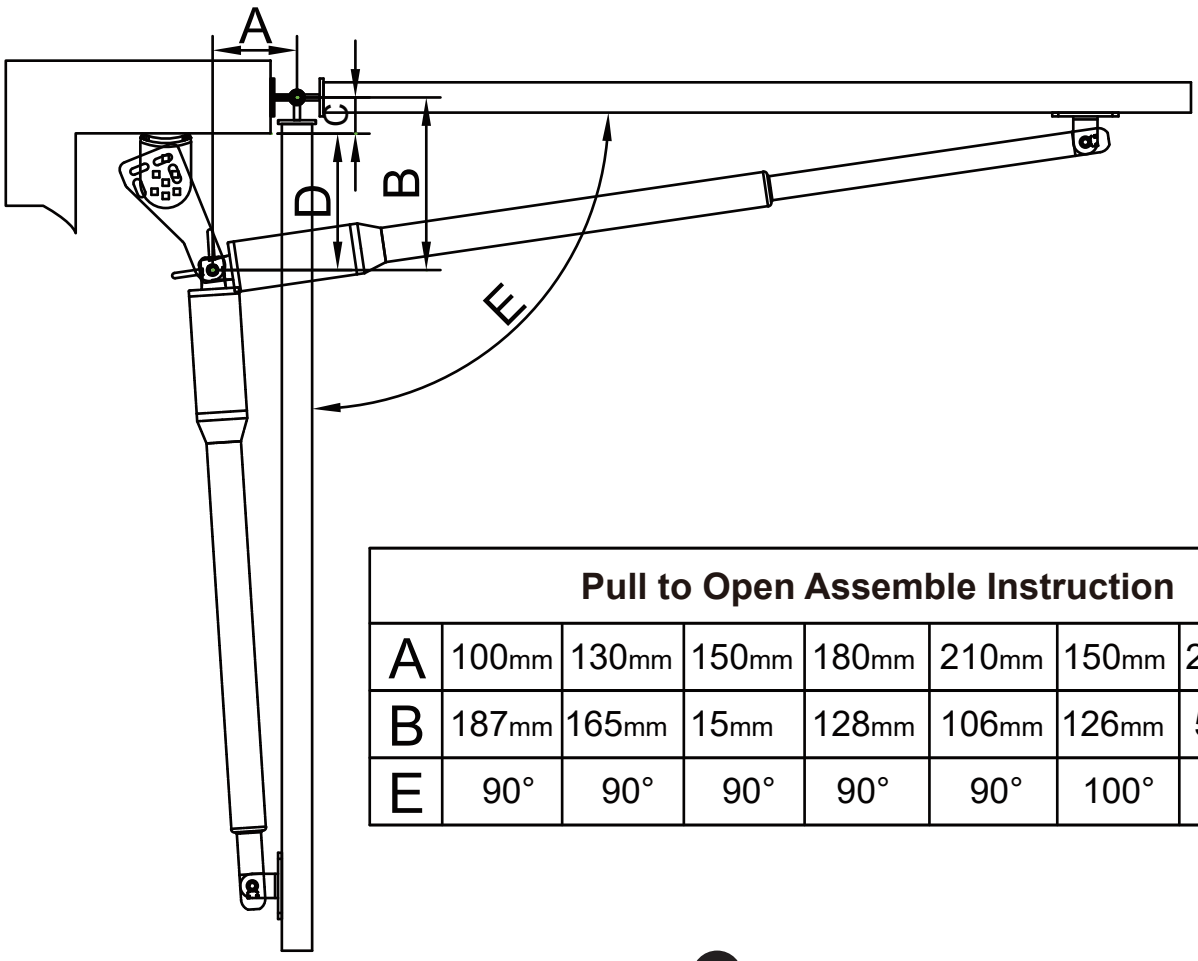

Pull to Open Assemble Instruction								
A	100mm	130mm	150mm	180mm	210mm	150mm	208mm	150mm
B	187mm	165mm	15mm	128mm	106mm	126mm	59mm	105mm
E	90°	90°	90°	90°	90°	100°	100°	110°

Push to Open Installation Mode

The installation position of the bracket is very important. Please refer to the figure to measure according to the angle you need to open. determine the center point of the shaft and mark it.

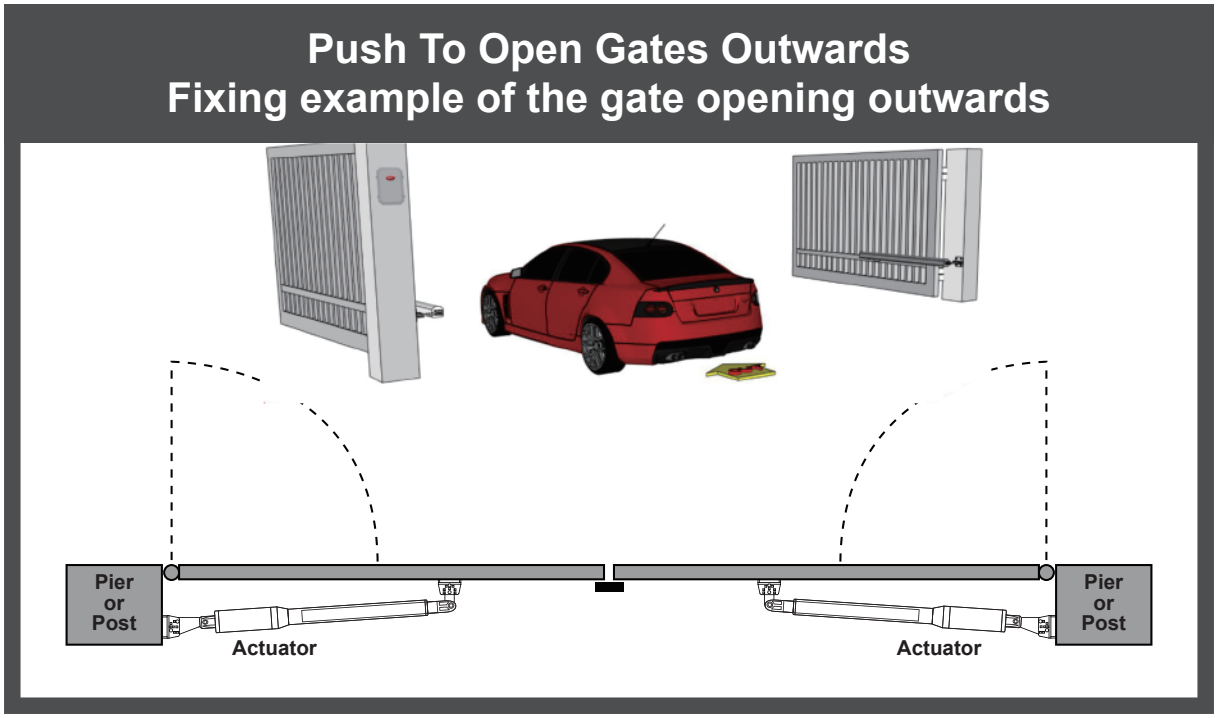

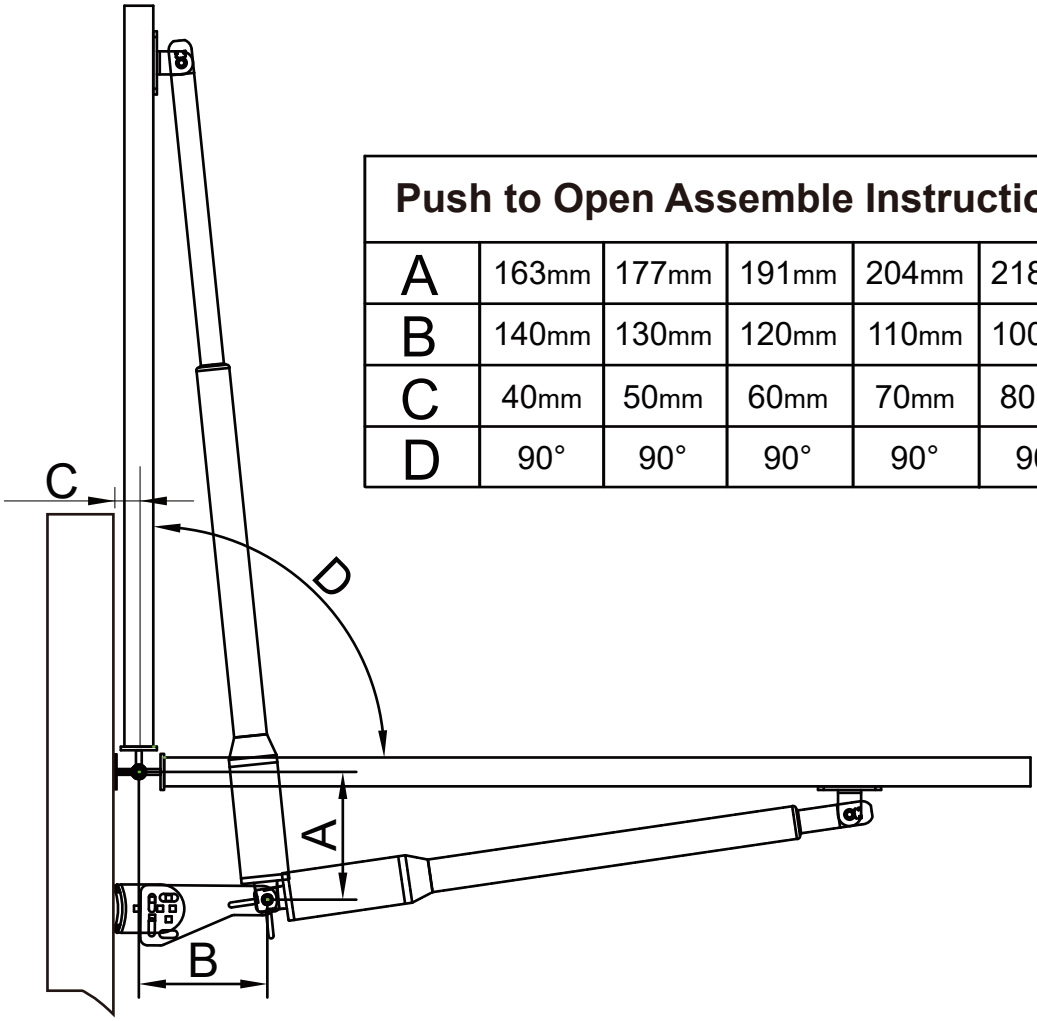

Push to Open Assemble Instruction					
A	163mm	177mm	191mm	204mm	218mm
B	140mm	130mm	120mm	110mm	100mm
C	40mm	50mm	60mm	70mm	80mm
D	90°	90°	90°	90°	90°

(1). According to the diagram, the post bracket plate is attached the fixed bracket with an appropriate angle. Take out the gate opener arm to install 2pcs Post Bracket (H) and Post Pivot Bracket (J) on the gate post. Fig ① and ② are left bracket install instruction, ③ and ④ are right bracket install instruction.

Adjusting different angles of Post Pivot bracket to fit different Installing mode:

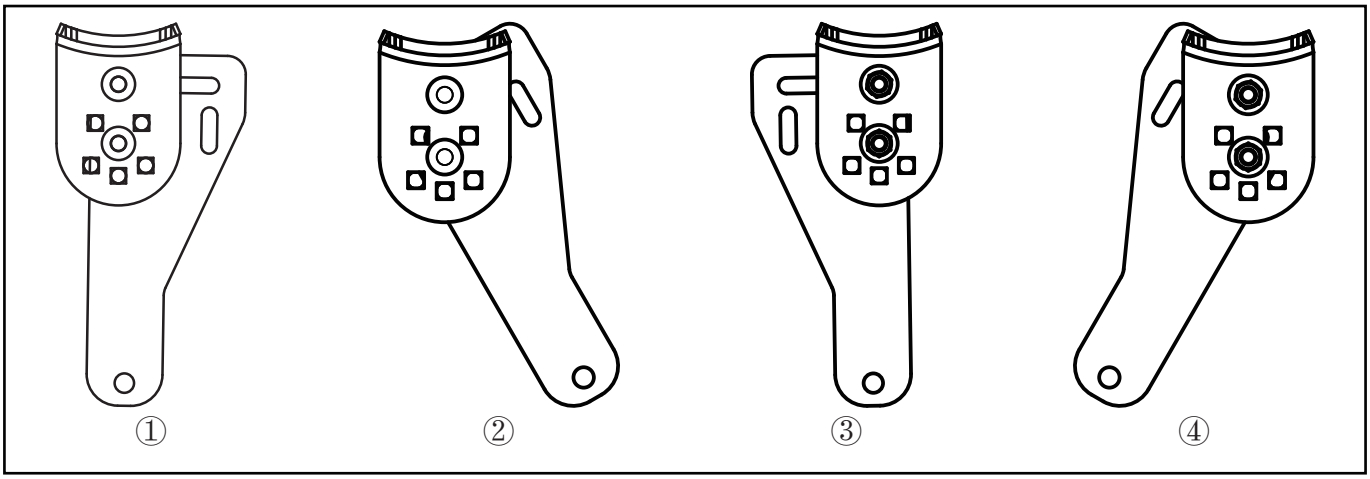

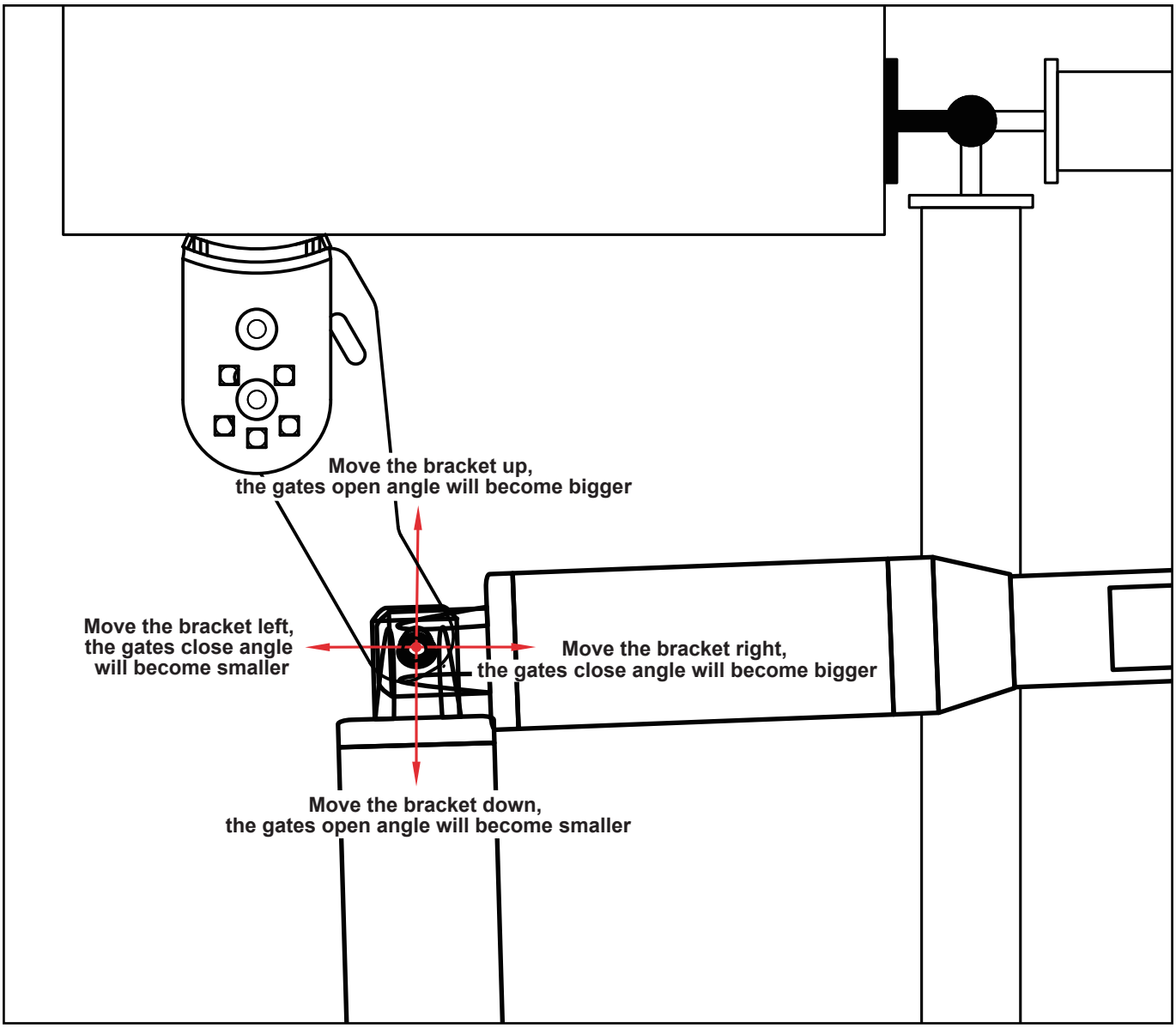

(2). Fully open the gate (take 90°as an example) and retract the arm of the gate opener to the shortest position (when determining the position of the gate bracket on the gate, make the gate and the wall when the gate bracket is vertical). The Post Bracket (H) & Post Pivot Bracket (J) is close to the wall, and the Gate Bracket (L) is close to the gate body. Mark the position on the gate body with a marker.

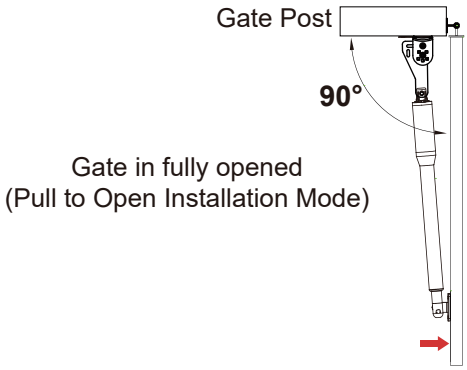

(3). Fully close the gate to 180°, extend the arm of the gate opener to the longest, place the Gate Bracket (L) on the market point on the previous gate, and observe whether the position is correct, drill holes at the marked position on the gate body to mount the bracket. Then the gate machine is placed horizontally, the position of the bracket is determined, and the hole is drilled. Install the bracket using M8*70 Bolts, Nuts, & Washers (M).

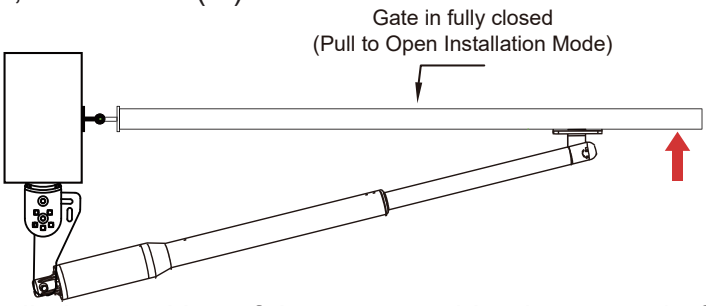

Please confirm that the installation position of the gate machine is correct before drilling holes.

Note: It is recommended to open and close the gate back and forth by switching between the longest and shortest position of the gate opener's arm. Determine that the marked point is correct, and then insert perforated lock screws or weld to mount the brackets.

Step 5. Hole Installation/Welding

(1). Fixed the Post Bracket and Post Pivot Bracket on the post

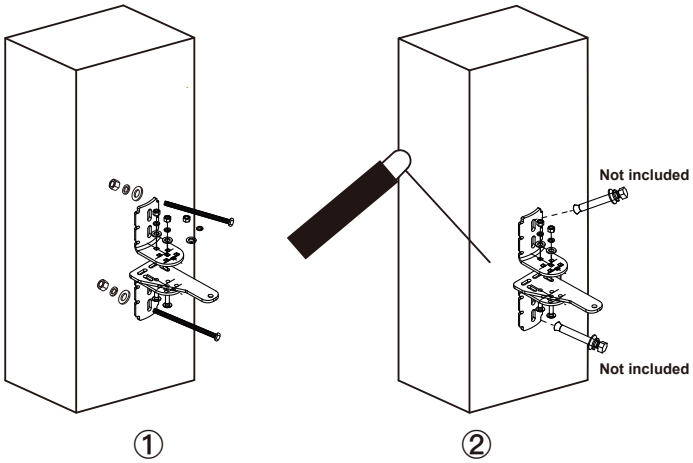

① Construction drill and tighten bolts:
a. Drill 4 Holes of 10mm diameter.
b. Insert the 4 provided M10*150 bolts, nuts, & washers (I) and tighten properly.
c. Place the motor connecting bracket and tighten with the provided screws.

② Construction drill and weld:
a. Drill 4 holes of 8mm diameter.
b. Locate the 4 slotted holes post bracket above the drilled holes.
c. Weld the motor to the post bracket.

NOTE! If it is a wall, you need to use expansion bolts, the size is M8*70.
We do not provide this type of bolt, please bring your own if needed.

(2). Motor drainage hole angle adjustment

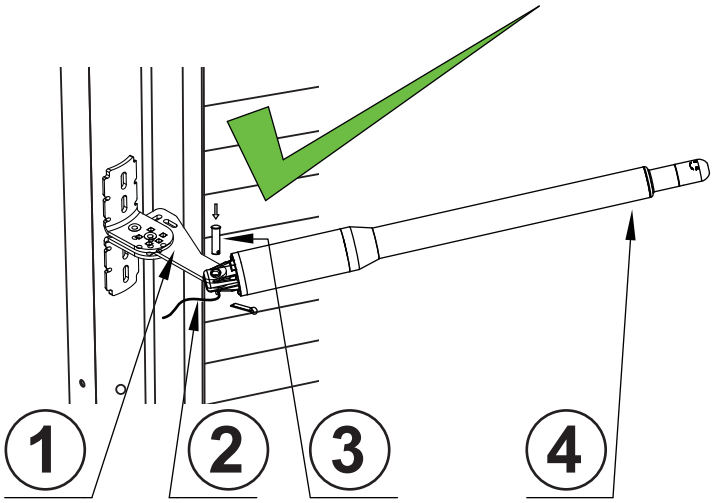

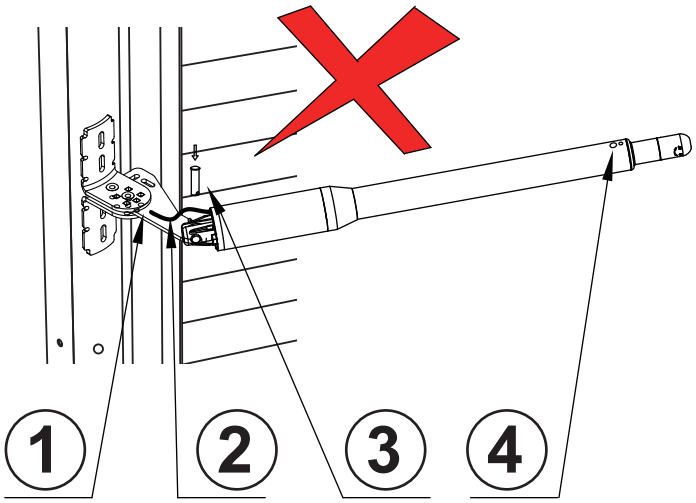

Figure left, Power Cable And Rain Drainage Aperture Placed Correctly

1. Post Pivot Bracket
2. Power Cable

Figure right, Power Cable And Rain Drainage Aperture Placed Incorrectly

3. Lock in
4. Rain Drainage Aperture (below the gate opener)

Notice: Incorrect Installation, see the right figure:

Cable must not be installed above the motor arm. It may pinch and strip the cable and causes electric shock. Follow correct installation as shown in Figure left.

(3). Attach the Front Pivot Bracket (L) to the gate body

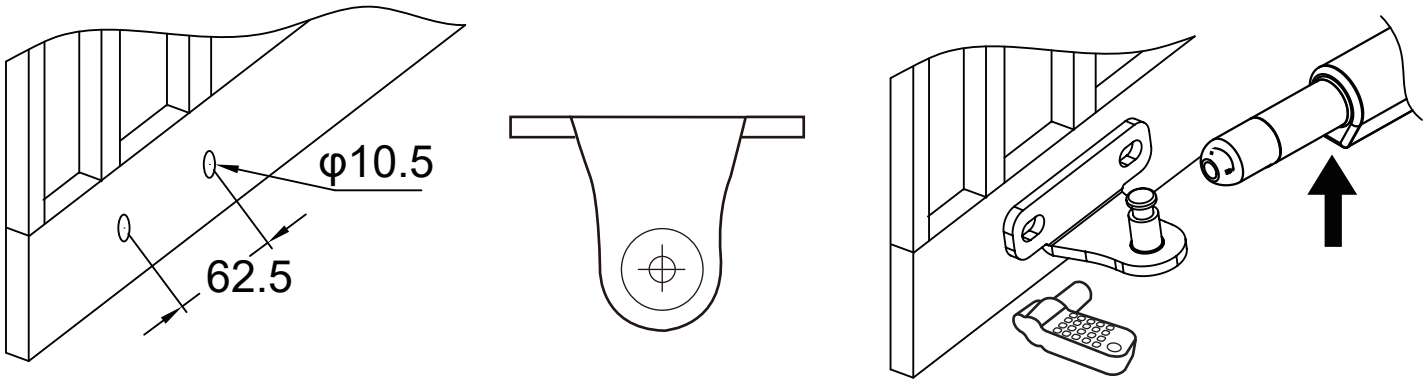

a.Drill 2 holes of 10.5mm diameter with space 62.5mm between 2 holes.
b.Locate the 2 slotted holes gate bracket above the drilled holes.
c.Place the end motor bracket to the gate bracket using the appropriate bolts and tighten properly.
d.Insert the lock pin and clamping washers

Step 6. Gate Limit Stop Installation

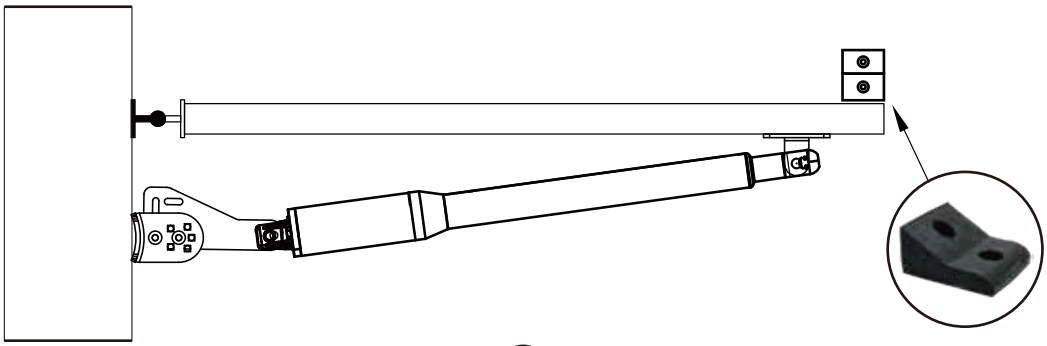

Step 7. Emergency Release Function

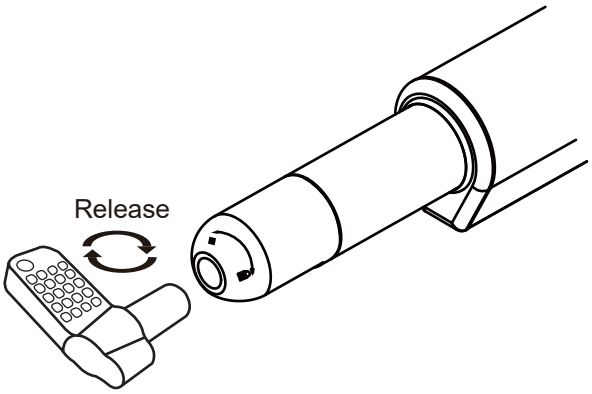

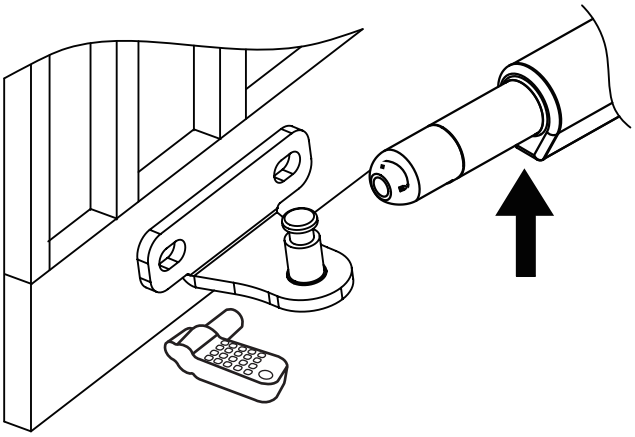

The schematic diagram of opening the gate body when there is no power is shown above. Please use the emergency release key to loosen the gate bracket and the arm of the gete opener. Then lift it up.

Mounting & Wiring the Control Box

Step 1

For punching and threading, please note that there are designed holes at the bottom of the control box. Please drill the corresponding number of holes based on your specific requirements.

Step 2

To install the control box use the deck screws. Even though the control box is waterproof designed, for security reason and a longer service life, it is recommended to install the control box inside a secure surface and at least 100cm (40 inches) above the ground to avoid being flooded or buried under snow.

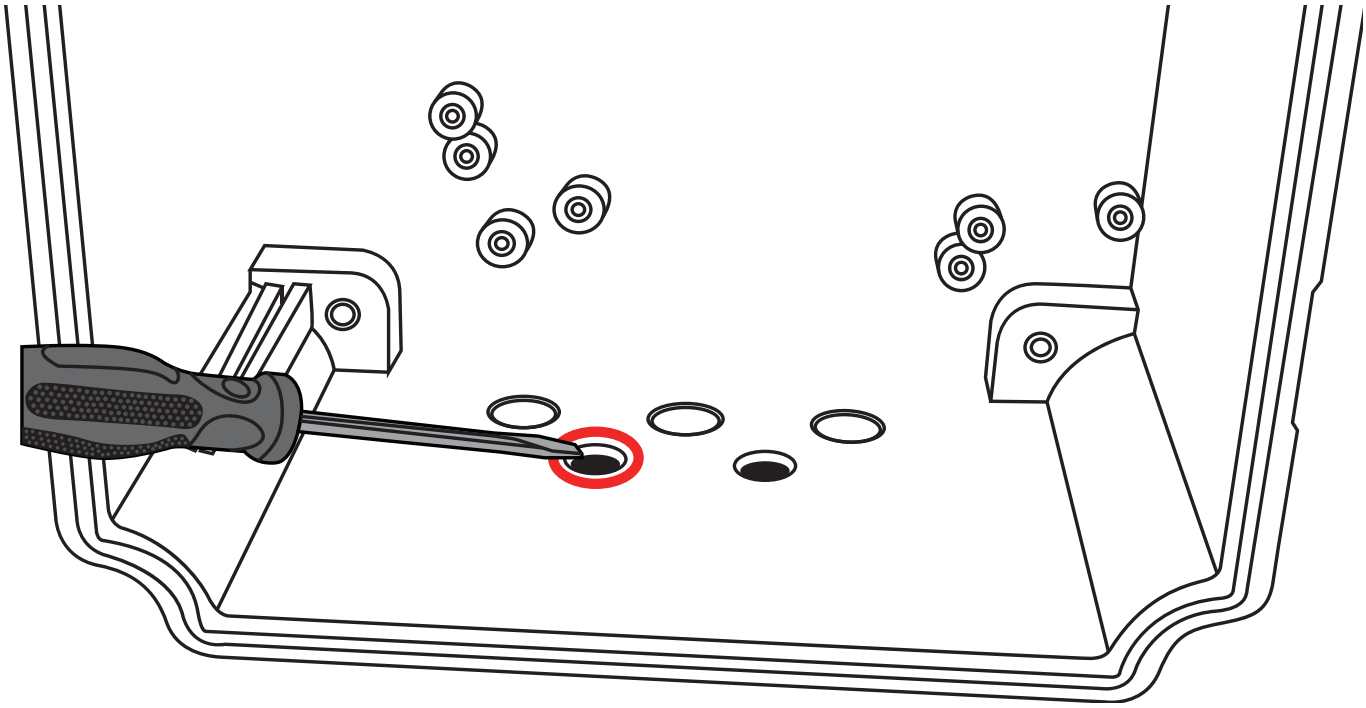

Step 1 Flip the control box to the back, fix the 4 gaskets at the 4 corners respectively, and screw them in.

Step 2 Flip the control box to the front, stick it on the wall, mark the holes at the 4 corners on the wall with a pen, drill holes, and then fixed the control box to the wall by screws.

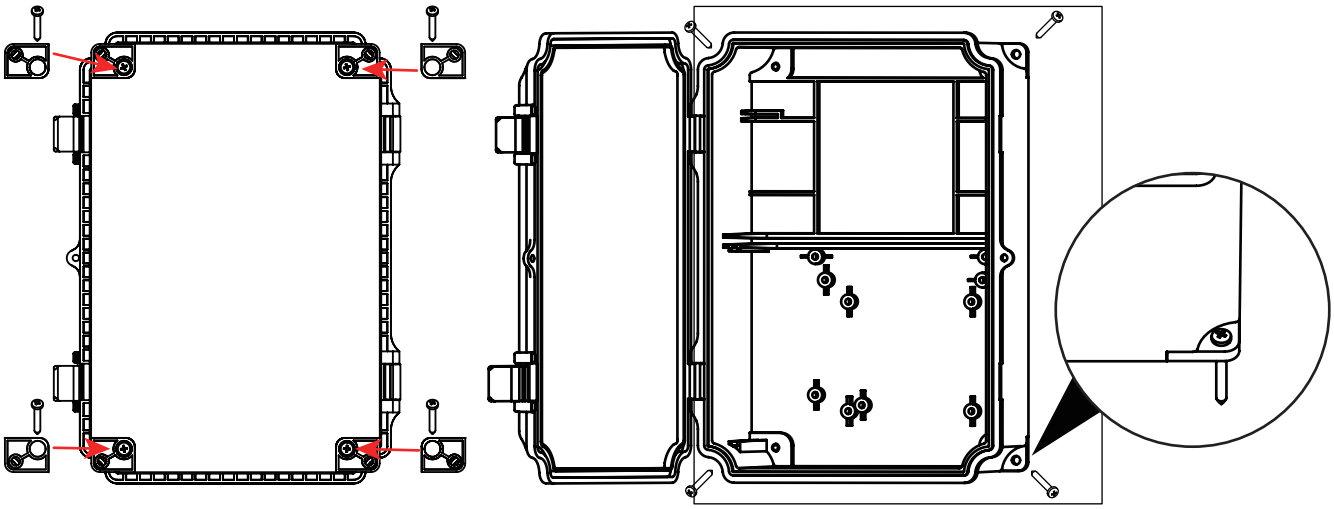

WARNING: NEVER connect the gate opener to the power supply before all the installation have been done.
Connect the power supply to the control box refers to the follow illustration.

NOTE: 1. Use copper conductors to connect to the power supply terminals.

2. The wire (not provided) size should be at least 18AWG which is intended to connect the power supply.

3. The 26 feet wire is used to connect the motor with the control board, and the 6 feet wire is used to connect the solar panel with the solar power charger device.

4. Run the wires in conduit to the control box to prevent damage to the wires from lawn mowers, weed eaters and grazing animals.

5. The fuse in the control board is interchangeable. A 10a, 250vac, ϕ 5*20mm fuse is suitable to the control board.

• Motor wiring

Pull to open

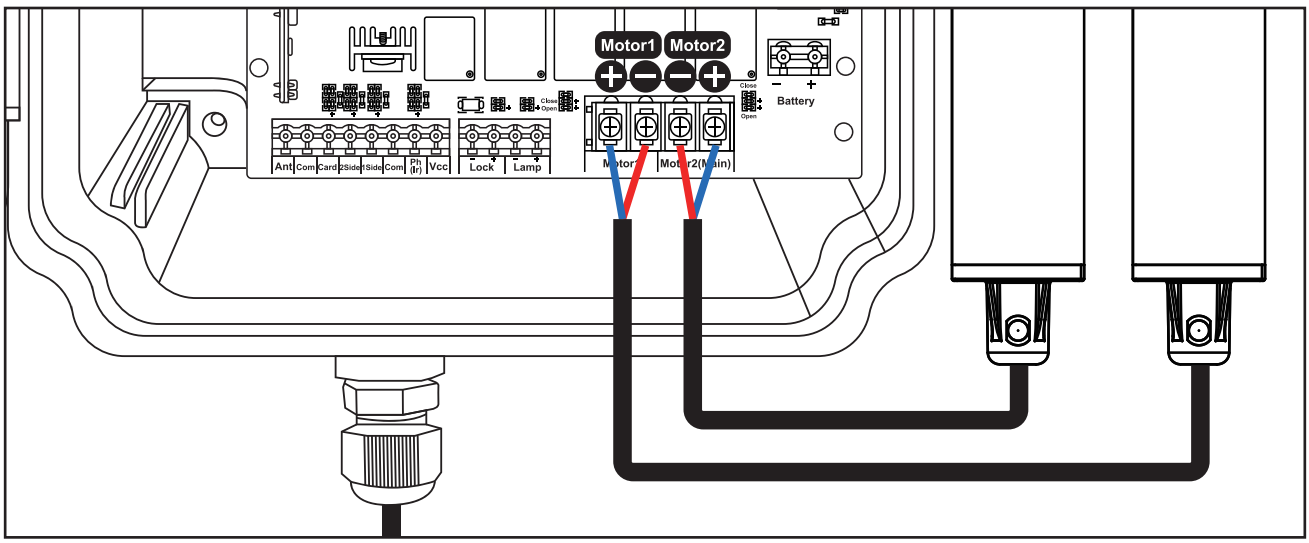

Motor 1 The **blue** wire should be inserted into the “ MOTOR 1 + ” terminal, the **red** wire into “ MOTOR 1 - ” terminal.

Motor 2 The **blue** wire should be inserted into the “ MOTOR 2 + ” terminal, the **red** wire into “ MOTOR 2 - ” terminal.

Push to open

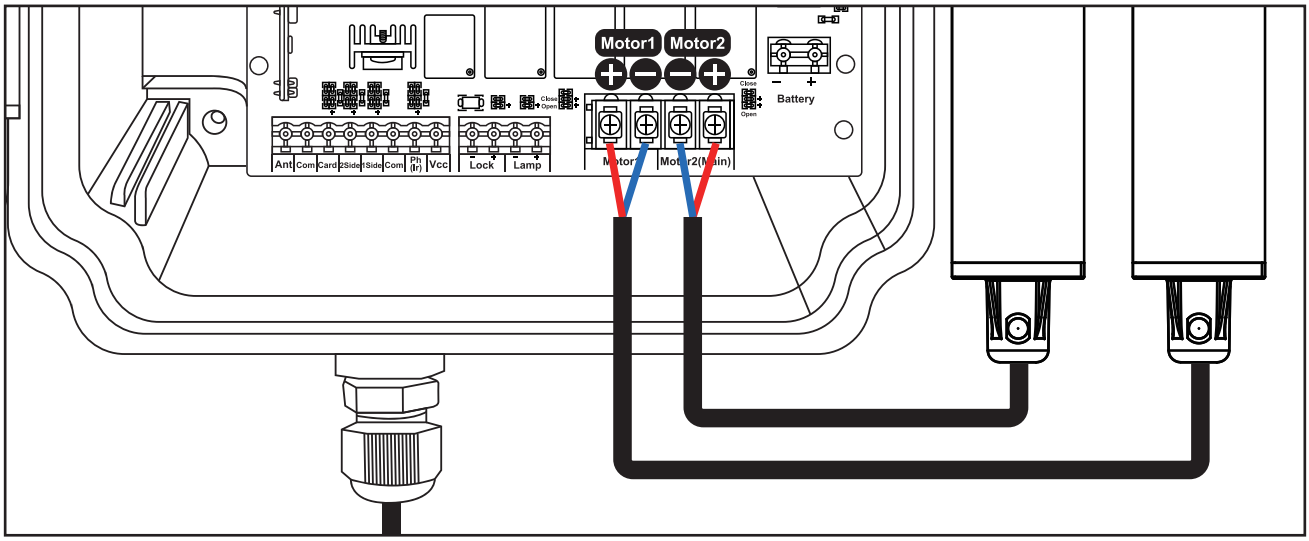

Motor 1 Insert the stripped cable wires into the appropriate terminals on the opener terminal block. The **red** wire should be inserted into the " **MOTOR 1 +** " terminal, the **blue** wire into " **MOTOR 1 -** " terminal.

Motor 2 Insert the stripped cable wires into the appropriate terminals on the opener terminal block. The **red** wire should be inserted into the " **MOTOR 2 +** " terminal, the **blue** wire into " **MOTOR 2 -** " terminal.

MOTOR 1: Slave gate, close first & open last.

MOTOR 2: (MAIN): Master gate, open first & close last.

NOTE: If you use it for a single door, please connect the Motor 2 only. At the same time, the PG mode of the control panel menu needs to be set to 1 (single motor).

NOTE! If the gate opens and closes in the wrong direction or the open/close indicator LED color are wrong when you control the gate operator, please cut off the power, reverse the wires of the wrong motor and reconnect it to the Motor port, then power on again.

• Power supply

Type 1: Use AC Electricity Only

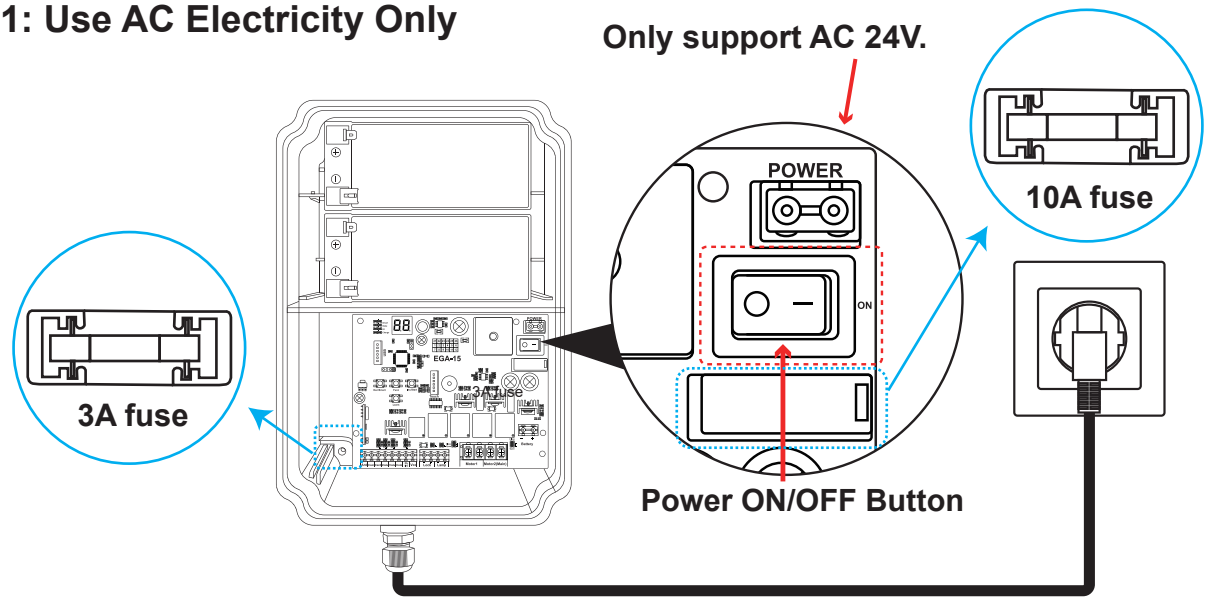

The AC transformer was put in the bottom of the control panel, and request to connect it to the POWER terminal.

The motor is 24V, please do not connect it directly to the mains power.

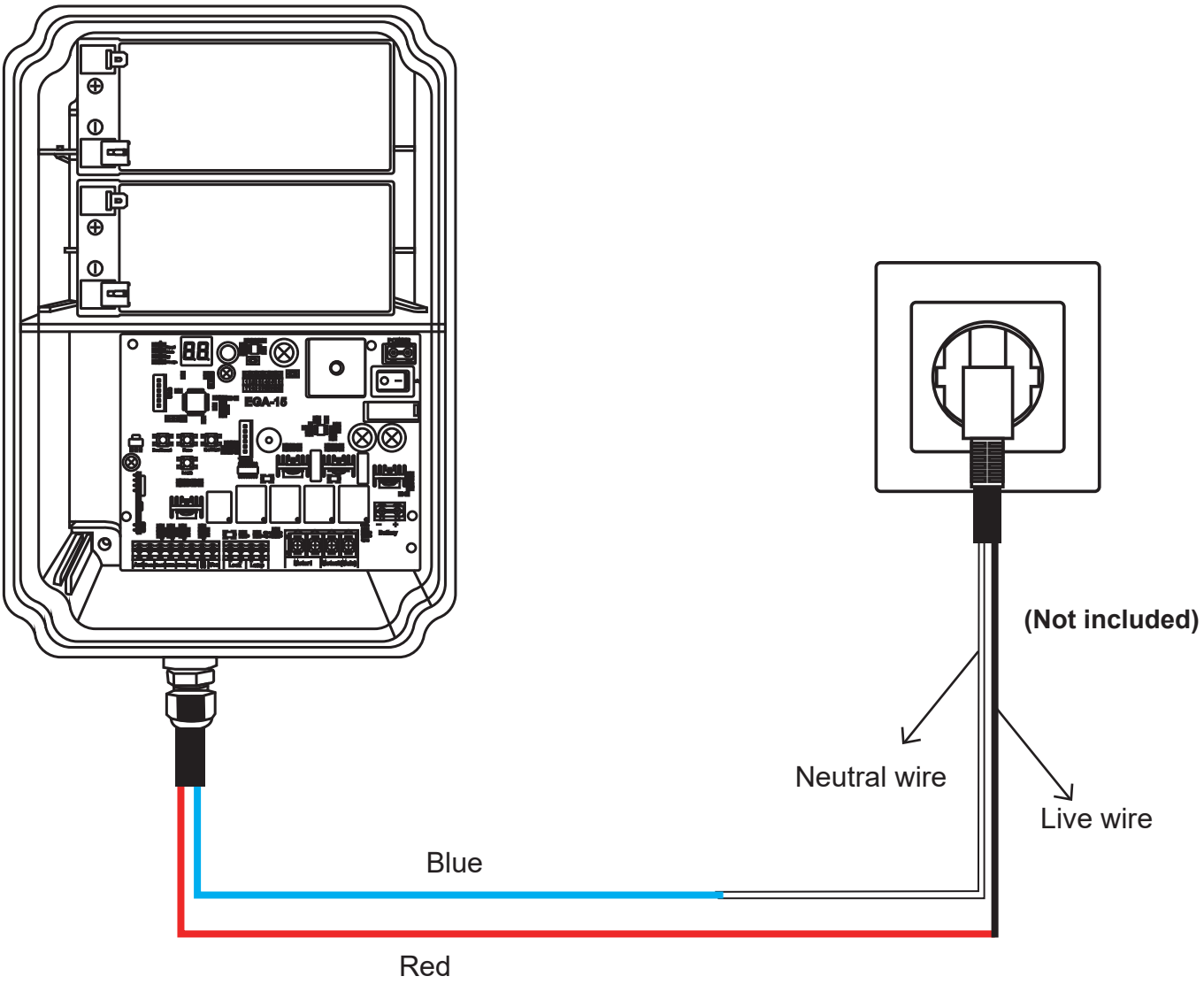

The AC transformer was put in the bottom of the control panel, and already connect it to the POWER terminal. And there has a 2-core cable was trough out the box, you need to prepare a 2-core wire with plug, and connect its live wire with red wire, and connect the neutral wire with blue wire. Final, plug it to get power supply.

Don’t forget to switch the Power ON button on the control board after you confirming the wiring is correct.

Type 2: Solar Power Mode Connection

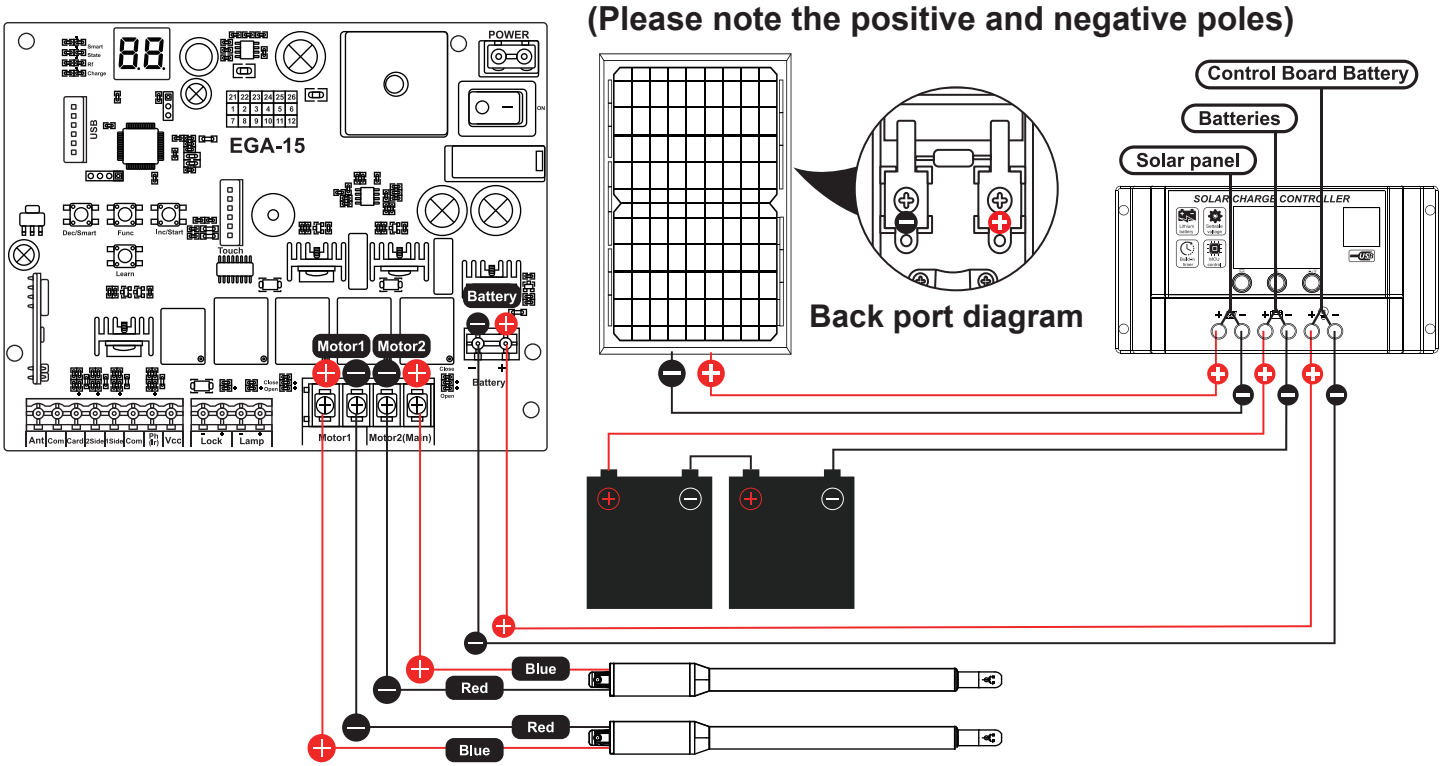

Type 3: By AC Electricity, Solar Panels and Back-up Batteries

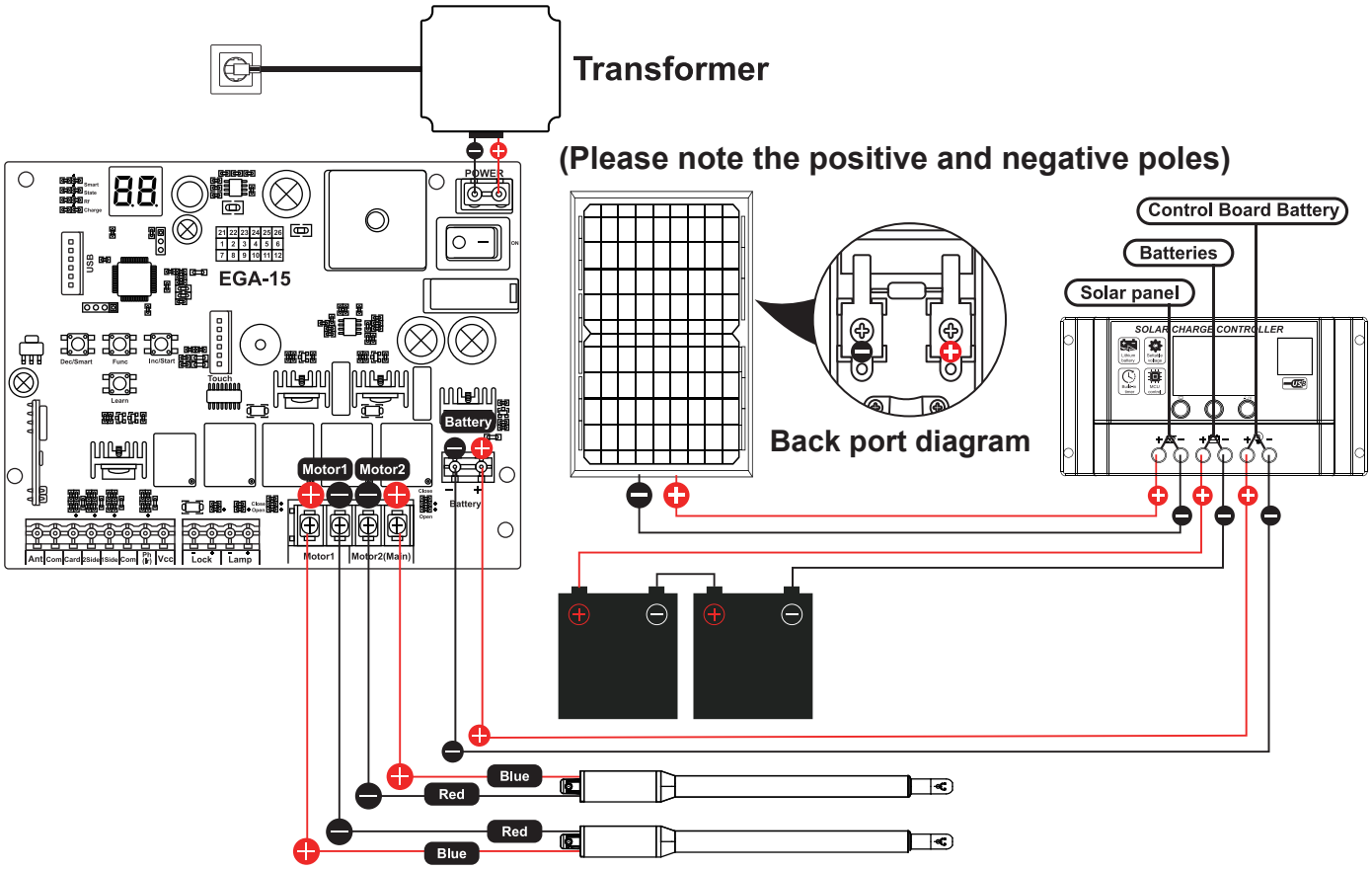

Before you using the back up batteries to provide power to the gate opener system, please fully charge the batteries first.

Tips: 1. Before you using the back up batteries to provide power, please follow the wire diagram to wire your solar power system and control board.

2. Adjust parameters setting in the solar power charger, the factory suggest that:

① The float voltage suggest to set 27.4V.

② The Discharge reconnect suggest to set 25V.

③ The discharge stop suggest to set 22V.

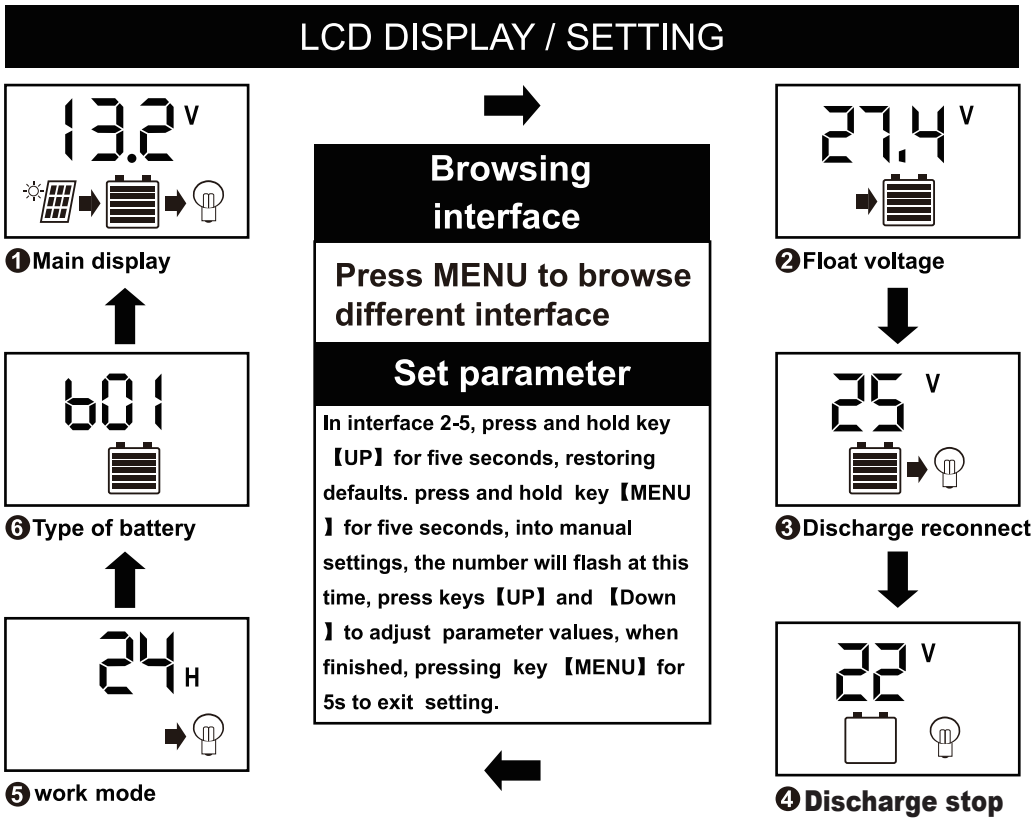

If you want to increase the charge current, please add a 24V 20W solar panels, connect both panels in parallel.

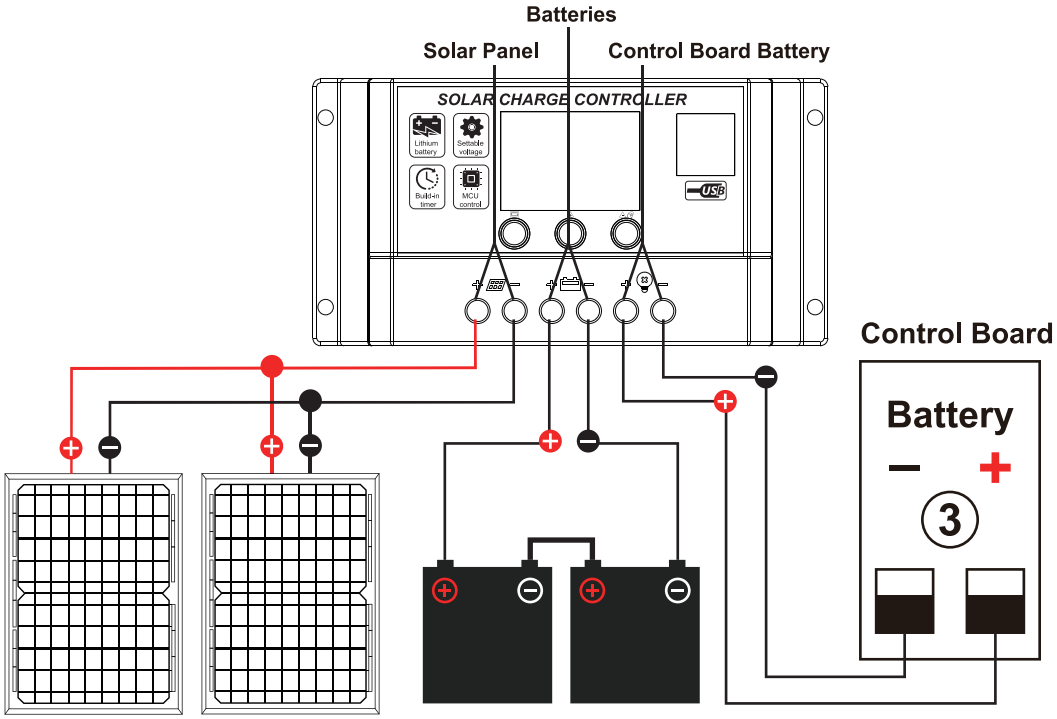

3. Press the / button once to close the function of provide power, until fully charge the batteries.

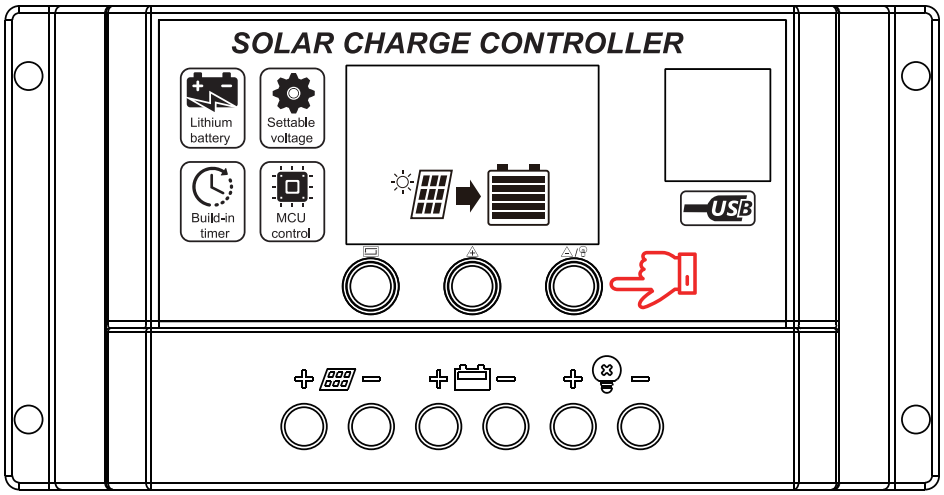

4. Press the / button again to provide power to the gate opener.

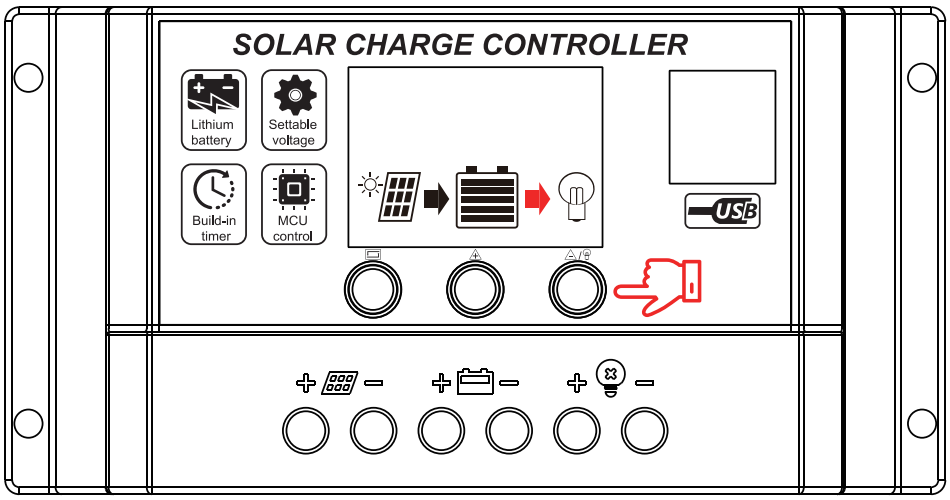

After correct wiring, verify the controller displays as shown in the figure to confirm proper connection. Incorrect wiring may damage the battery or prevent solar charging.
Install the solar panel facing the direction with maximum duration sunlight throughout the day. Keep it free from surrounding shadows at all times; otherwise, charging efficiency will decrease.
If you have any questions before use, please contact us at JUJIANGservice@outlook.com Providing a video will help us resolve your issue more quickly.

5.Battery usage safety rules

Low Voltage Protection: Users must set the charging and discharging limit values according to the instructions. For example, when the battery voltage is insufficient (below 22V), the system will automatically cut off power supply. It is strictly prohibited to bypass this protection function and forcibly continue power supply. You must wait until the battery charges to a safe level before continuing to use it.
Frequent Power Supply: If the battery is frequently used for power supply, additional solar panels of the same specification must be installed to improve charging efficiency and avoid long-term insufficient battery charging.
Compliance and Responsibility: Any failure to operate in accordance with the wiring, parameter settings, or battery usage instructions in this manual will result in the purchaser bearing full responsibility for any resulting equipment failures, battery damage, or related issues.

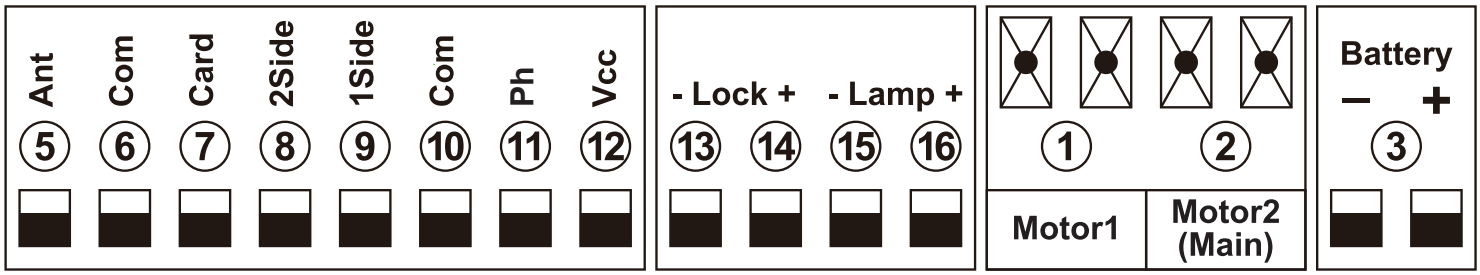

1. **MOTOR 1: Slave gate, close first & open last.This terminal connects 1st red wire (counted from your left-hand side to your right-hand side).**

2. **MOTOR 2(Main): Master gate, open first & close last.This terminal connects 2nd blue wire (counted from your left-hand side to your right-hand side).**

NOTE! If you only have a single gate, the motor only can connect to the Motor 2 terminal. At the same time, the PG mode of the control panel menu needs to be set to 1 (single motor).

3. **BAT +/-:** It is for connecting with the DC 24V back up batteries.
4. **Power:** It is for connecting with the AC transformer or DC 24V solar panel.
5. **Ant:** Connect with the antenna.
6. **COM:** It is for connecting with the COM or GND.
7. **Card:** It is for connecting to any external devices that will operate to open the gate.
8. **2 SIDE:** Same as the “ double-leaf button ” of the transmitter, it is for connecting with any external devices that operates a double gate.
9. **1 SIDE:** Same as the “ single-leaf button ” of the transmitter, it is for connecting with any external devices that operates the single gate.
10. **COM:** It is for connecting to the COM or GND.
11. **Ph:** Photocell terminal is for connecting with the photocell sensor.
12. **VCC:** The output is for connecting WITH the photocell sensor, etc devices, continuous output current <=0.5A.
13. **Lock -:** used for connecting with the“ground” of the lock.
14. **Lock +:** used for connecting with the electric lock.
15. **Lamp -:** It is for connecting with the flash light -.
16. **Lamp +:** It is for connecting with the flash light +.
17. **Menu:** It is a digital display for showing you the setting data.
18. **Touch:** It is for connecting with the touch button, etc devices.
19. **USB:** It is for connecting with a USB device to upgrade the software.
20. **DEC/Smart:** used for figure decreasing of setting the data or operating the smart module.
21. **FUN:** It is for storing data.
22. **INC/Start:** used for figure increasing of setting the data or operating the single button control mode.
23. **Learn:** It is for programming/erasing the remote control.

• Accessories wiring

Connect of Push Button Device

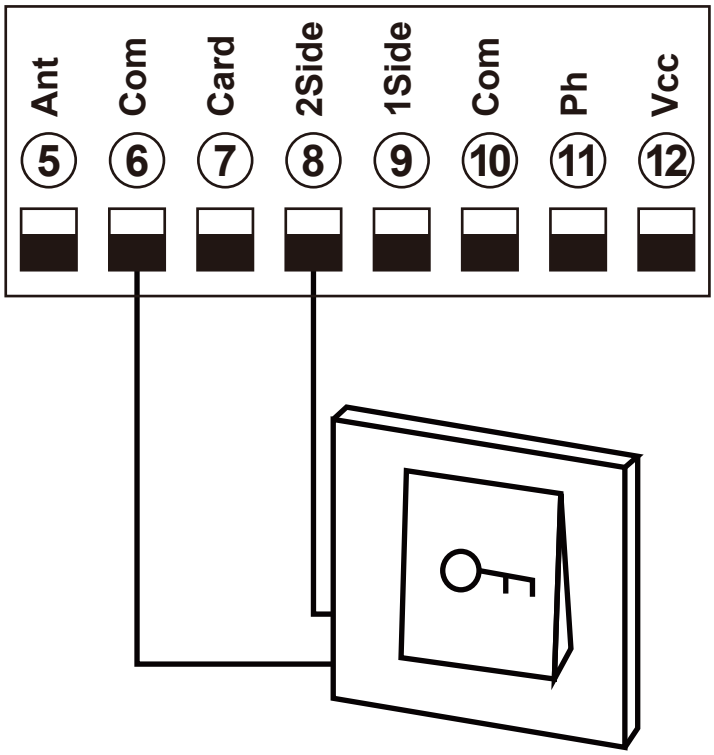

Terminal ⑧ **2SIDE** and ⑥ **COM** are use to connect with push button for controlling dual gates.
Note! If you connect the wired keypad, etc devices, please also connect with ⑫ **Vcc** and ⑩ **Com** to get the power supply.

Connection of Swipe Card Device

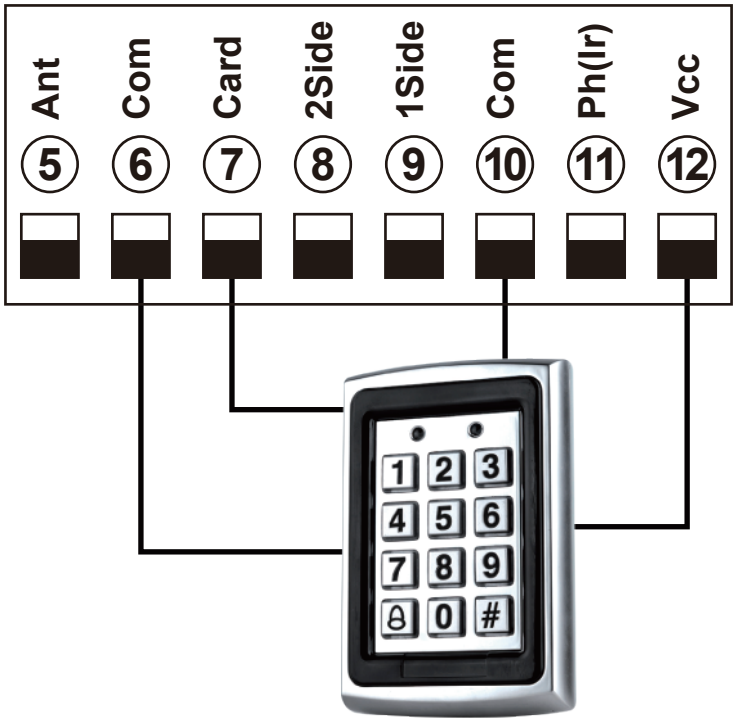

Terminal ⑫ **VCC** and ⑩ **COM** are used to supply power to swipe card device.
Terminal ⑦ **CARD** and ⑥ **COM** are use to connect with swipe card for controlling dual gates.

Connection of Safety beam Sensor Device

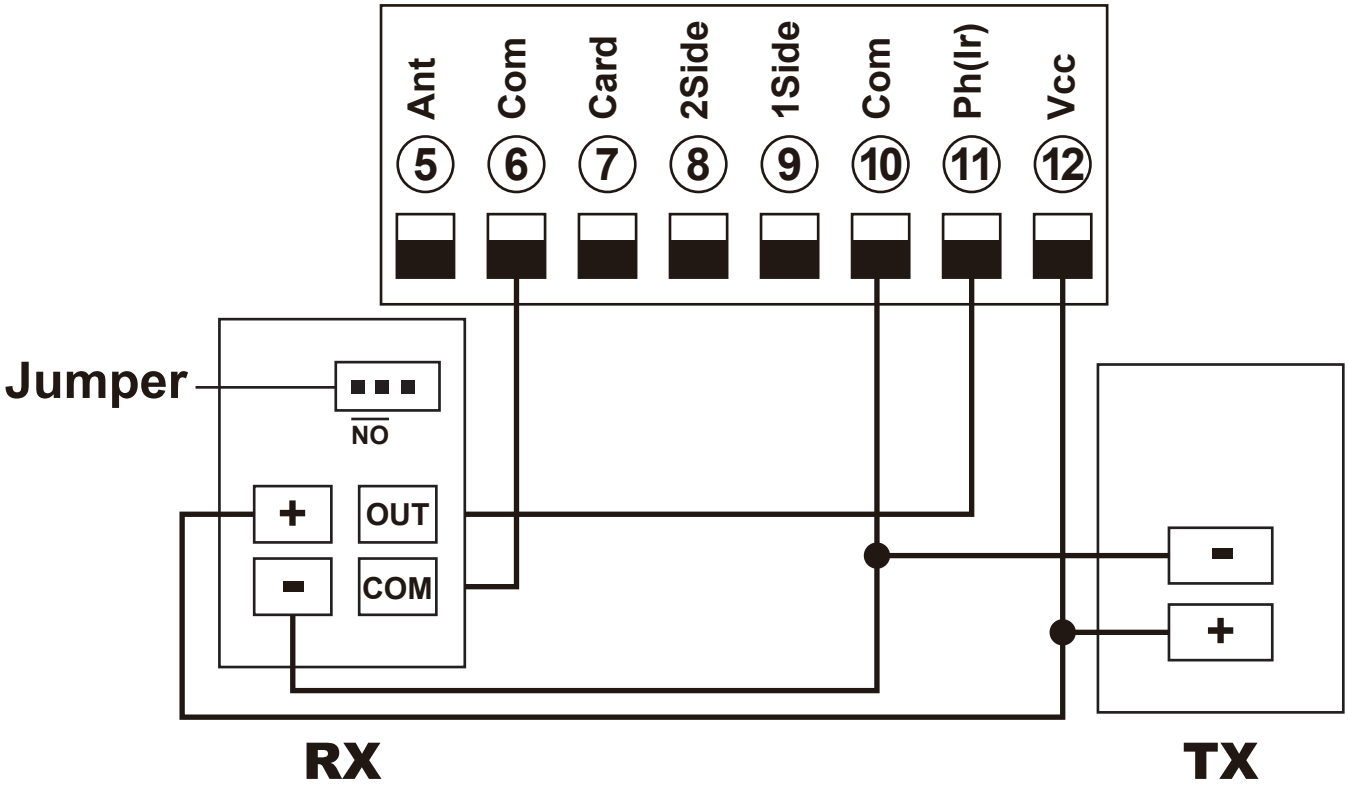

Terminal ⑫ **VCC** and ⑩ **COM** are used to supply power to safety beam sensor device.
So, connect terminal ⑫ **VCC** with the "+" of the safety beam sensor RX and TX device.
Connect terminal ⑩ **COM** with the "-" of the safety beam sensor RX and TX device.
Connect terminal ⑪ **PH** with safety beam sensor "OUT".
Connect terminal ⑥ **COM** with safety beam sensor "COM".

Connection of Flash Lamp Device

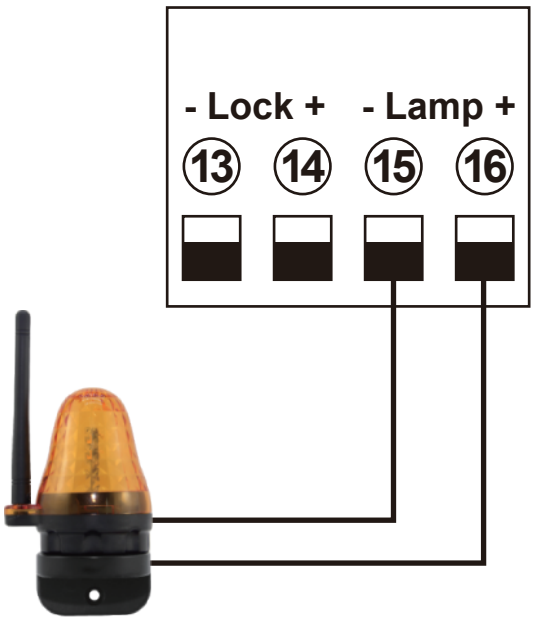

Terminal ⑮ ⑯ **Lamp + / -** are used to connect with flash lamp.

Connection of electric lock device

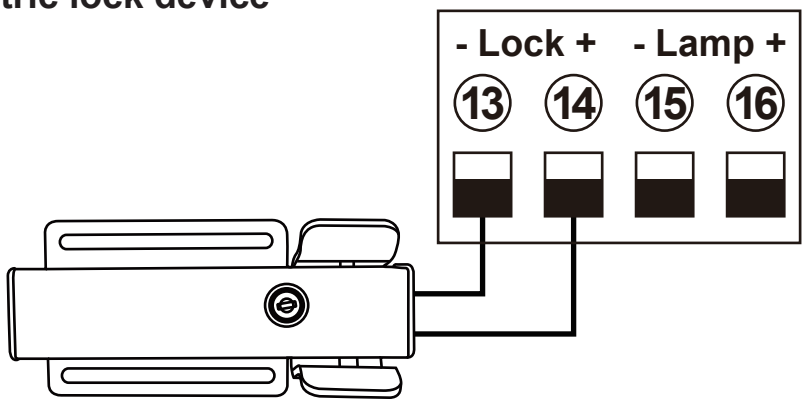

Terminal ⑬ **LOCK-** is used to connect with electric lock blue wire.
Terminal ⑭ **LOCK+** is used to connect with electric lock red wire.

How to Program or Erase The Remote

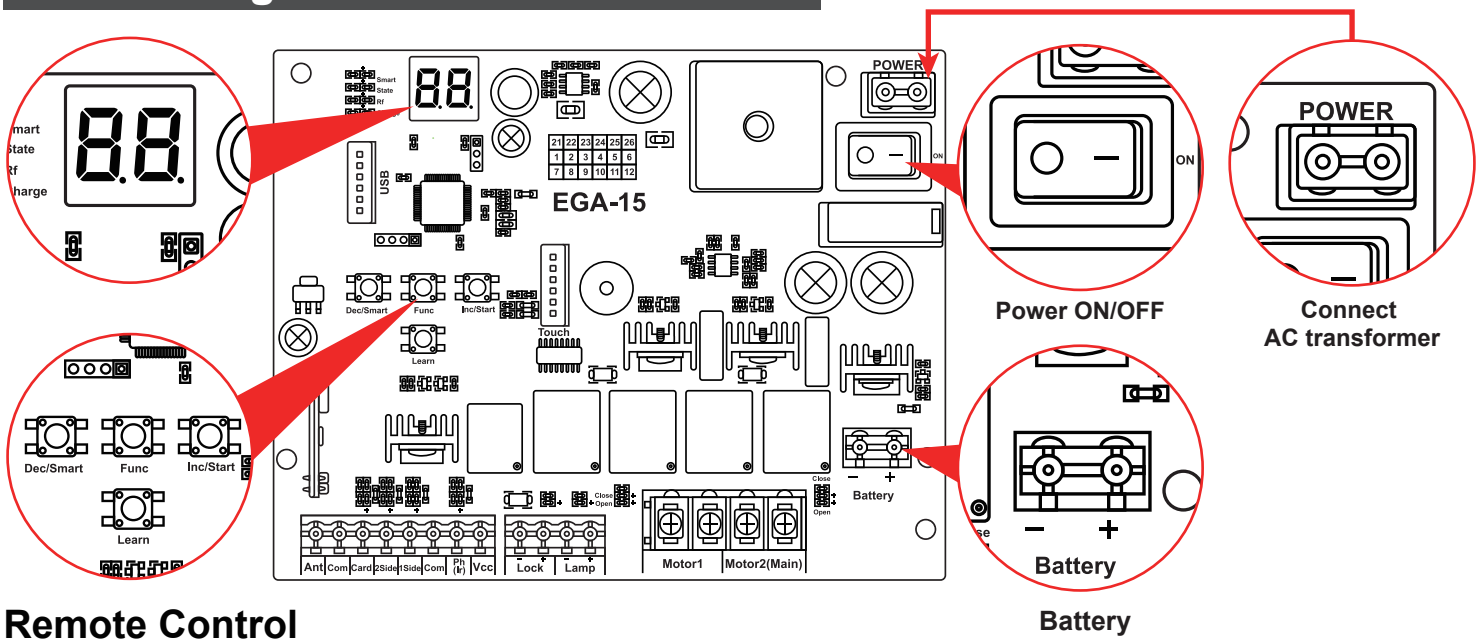

Remote Control

Button "1" is used to operate a single gate Motor 2; **button "2"** is used to operate a double gate Motor 1 and Motor 2. **Button 4** is used to turn auto close off via remote.

Button 1 and 2 are used to cycle control the single and dual gate motor through **"open-stop-close-stop-open"** mode. For example, press the button 1 once, the main door will open, press button 1 again, the door will stop, and press the button 1 at the third time, the door will close.

Program new remote control:

- Short press the **[Learn]** button on the control board then release, and the buzzer will sound with a short beep. The digital display menu will show the remote's number, which means the programming is successful.
- After you press the **[Learn]** button, if the board does not receive the new remote signal within 8s, the indicator LED will turn on and exit programming.
- Note: Due to the digital display only can show two words, if the controller already learned more than 99pcs remote, from the 100th remote, the digital display will show A to replace the ten and hundred digits. Such as the 100th remote will show A0, and the 101st remote will show A1. If the controller already learned more than 109pcs remote, from the 110th remote, the digital display will show b to replace the ten and hundred digits.Such as the 110th remote will show b0. And the 120th remote will show C0.
- Max capacity: 128pcs remote. If the digital LED shows "-" with a buzzer short beep 5 times, then means can not learn more remotes.

Erase remote control:

- Hold press the **[Learn]** button for about **6 seconds**. If the buzzer sound with a long beep, release the button and the digital display will show 00, which means remove all remotes successfully.

Caution: if you lose one of any remote control, please erase all remotes and program them into the control board again for safety.

Function Description of the Control Board

Function	State
Power On	The digital display will show EGA-15 and software UX information with a buzzer sound. If the indicator LED light on, means the system is working well.
Setting of 1Side terminal	The digital display menu can set the 1 SIDE terminal control mode by PE. **Mode 0:** Motor 2 "Open-Stop-Close”.....; **Mode 1:** Open only, open Motor 2 in single gates mode, open Motor 2 in single gate mode. **Mode 2:** Close only, close Motor 2 in single gates mode, close Motor 2 in single gate mode. **Mode 3:** Stop only.
Setting of 2Side terminal	The digital display menu can set the 2 SIDE terminal control mode by PD. **Mode 0:** Motor 1and Motor 2 "Open-Stop-Close”.....; **Mode 1:** Open only, open both Motor1 and Motor 2 in double gates mode, open motor 2 in single gate mode. **Mode 2:** Close only, close both Motor1 and Motor 2 in double gates mode, close Motor 2 in single gate mode. **Mode 3:** Stop only.
High and low speed time setting	The high speed running time of Motor 1 and Motor 2 can be set by the digital display menu P4 and P5. When the high speed running time is completed, the remaining time will be run at slow speed. The slow speed can be adjusted through the menu PH.
Motor overcurrent sensitivity setting	The function can realize to anti crash the car and motor stop while the gate is opened or closed fully. While the gate is moving, it meets obstruction and will stop right now. The motor’s overcurrent sensitivity setting of high speed and low speed can be adjusted by the digital display menu. If the menu PI set 1, while the gate is closing and detecting the obstruction, the gate will rebound to open fully.
Limit mode	The menu PI can adjust the limit mode of the swing gate system. 0 is overcurrent, while the motor runs with low speed and meet the obstacle, then detect the overcurrent, it is judged as a limit. 1 is the limit switch. After the door machine runs in place, the limiter is disconnected. The system detects that the limiter is disconnected and determines that it is a limit.
Time delay with 2 gates for opening and closing	Time delay with 2 gates for opening and closing can be adjusted separately by the menu P7 and P8. If user set 0, means close the delay function. If the delay function is active, when opening the door, motor 2 opens first then motor 1 opens later; while closing the door, motor 1 closes first then motor 2 closes. For the single gate system, this function does not work.

Safety beam mode	The safety beam mode can be be selected by menu PF, the default mode is 1, it is normal open mode. 1.While the gate is closing, if the infrared signal meets an obstruction, the gate will rebound to open. 2.If set the auto-closing timer after fully opening, the gate will be auto-closed. 3. If the safety beam signal exists, the gate closing action will not be executed and the countdown time will always be reset.
Auto-closing (Non-swipe card)	1.The auto-closing function only can be triggered when the gate is opened fully. 2.The auto closing starts countdown, the indicator flashes at 1s intervals. 3.Auto closing time can be set through the menu. Cancel the auto-closing function by pressing the fourth button on the remote. Note,only cancel this time. Next time you open the door again, you can still start the auto-closing.
Swipe card to open and auto-close the gate	1.Trigger the function, it will open the double gates. When the gates are opened fully, the user can set the auto-closing function independently. The auto-closing time can be set by the menu. 2.If the gate system is setting the single gate mode, the user swipes the card and only operates to open the single gate.
Lamp mode	The lamp work mode can be selected by menu PA. Mode 0: While the gate is moving, the lamp will light on. While the gate is stop moving, the lamp will turn off. Mode 1: While the gate is moving, and the lamp will light on. After 30s, the lamp will turn off. In addition, regardless of mode 0 or mode 1, the lamp will also light on during the countdown to closing the gate.
Lock mode	1.The lock mode can be switched by menu PC. 0:NC mode,power on when locked, used for electromagnetic lock. 1:NO mode,power on when unlocked, used for electric lock. 2. The control output time of the electric lock can be set by menu Pb. If set to 0, it means turning off the function.
Gate mode	1.The gate mode can be switched by menu PG. 0 is dual gates, which is a double gates opener system. 1 is single gate, which is a single gate opener system. 2.If the system is single gate system, all control for the double gates only operate on the main gate(Motor 2) **Please adjust the PG value to "1"**. 3.If it is the single gate system, the motor must be connected with motor2 port.
Motor working time protection	1.If the motor works continuously more than 60s, the motor will stop running for protection. 2. If the motor works continuously with low speed more than 30s, the motor will stop running for protection.

Smart charger function for back-up battery	1.The system will automatically identify whether it is a 24V system every time it is powered on. If the power supply voltage is changed, power on again. 2.When the voltage of one battery is less than 27V±0.5, the charging function will automatically start and the charging indicator light will turn on. 3.When the voltage of one battery is greater than 28V±0.5, the charging circuit is automatically disconnected to prevent overcharging. Note: When the control board connects with the main power (AC power or solar panel) and back-up battery, the battery will be charged.
Battery low voltage protection	1. In the stopped state (when the motor is stopped), when the system detects that the battery voltage is less than 24V±0.5 , the buzzer will sound twice each time the control is performed, and the digital display will show "L1", indicating that the current battery voltage is too low, and the motor will run at a low speed. 2. When the battery voltage continues to drop to 23V±0.5, the buzzer will sound twice each time the control is performed, and the digital display will show "Lb", indicating that the battery is exhausted and the motor can not work.
Touch port	It can connect the touch switch with the control box, has 2 channels. 1.Cycle control the motor 2 by Open-stop-close-stop cycle... 2.Cycle control the motor 1 and motor 2 by Open-stop-close-stop cycle...
Factory Reset	The factory reset needs to be performed at the factory to restore parameters to the default state; see the table below.

Control Board Parameters Setting

Check again for complete and correct assembly of your swing gate opener and gate. Plug the Power Grounded Cord into the nearest AC outlet or with Solar Power System. After power on, digital display will self-check from **00-99** with buzzer sound. If indicator LED light on, buzzer stop sound, it means the system is normal.

- Press and hold the **[FUN]** button for 3 seconds, and the digital display will indicate **“P0”**, then release the button, now the menu can be set to **[INC/START]** and **[DEC/SMART]** for increasing and decreasing numbers or values.
- After adjusting the value, press the **[FUN]** button to store the data, and the buzzer will beep one time to show the store successfully.
- After the menu setting is finished, press the **[LEARN]** button to exit the menu setting and close the display.

Item	Function description	Range	Default	Explanation
P.0	Motor 1 overcurrent setting in slow speed	0~20 Class	10 Class	Motor overcurrent setting in slow / high speed, the bigger the value is, the harder the motor to stop. Setting value from 0-20
P.1	Motor 1 overcurrent setting in high speed	0~20 Class	10 Class	
P.2	Motor 2 overcurrent setting in slow speed	0~20 Class	10 Class	
P.3	Motor 2 overcurrent setting in high speed	0~20 Class	10 Class	
P.4	Setting Motor 1 high speed running time	3~30 s	5 s	Used for setting the high speed running time of Motor 1 and motor 2, gate will run in high speed within this setting, then change to slow speed with its rest travel.
P.5	Setting Motor 2 high speed running time	3~30 s	5 s	
P.6	Auto-closing timer for swipe card terminal triggering	0~99 s	10 s	0 means No auto-closing for swipe card terminal triggering.
P.7	Time delay with 2 gates for opening	0~15 s	2s	0 means No time delay for opening 2 gates
P.8	Time delay with 2 gates for closing	0~15s	2s	0 means No time delay for closing 2 gates
P.9	Auto-closing timer	0~99 s	0	0 means No auto-closing
P.A	Flash Lamp Mode	0: Mode 0 1: Mode 1	0	**Mode 0:** Flashing lamp and motor will operate and stop at the same time. **Mode 1:** Flashing lamp will turn off 30 seconds after the motor stop.
P.b	Electric lock working time setting	0~5s	0	Used for setting the working time of electric lock. Setting from 0-5 seconds. 0 means electric lock disabled.
P.C	Lock mode	0: NC 1: NO	1	**NC mode:** power on when locked, used for electromagnetic lock. **NO mode:** Normal open, power on when unlocked, used for electric lock.
P.d	Setting of 2Side terminal	0~3	0	Please read the details from the table of “function description of the control board”.
P.E	Setting of 1Side terminal	0~3	0	
P.F	Safety beam mode	0： NC 1： NO	1（NO）	**0:** NC mode, normal close. **1:** NO mode, normal open.
P.G	Gate mode	0~1	0	**0:** double gates (Motor 1 and 2). **1:** single gate (Motor 2).
P.H	Setting speed of slow speed	0~10	6	

P1	Limit mode	0~1	0	**0:** overcurrent. **1:** Limit switch.
Pu	Setting gate type	0~1	0	0: common gate. 1: heavy duty gate.
PL	Power voltage	0~1	1	0: 12V. 1: 24V.
Po	Factory Reset	0~10	0	5: factory reset.

Control board digital display information show:

1. When the gate is opening, the digital display will show motor 1 is **“ OP ”**, motor 2 is **“ OP. ”**, and open double gates will show**“ O.P. ”**
2. When the gate is closing, the digital display will show motor 1 is **“ CL ”**, motor 2 is **“ CL. ”**, and close double gates will show**“ C.L. ”**
3. After the gate stop moving, the digital display will show the motor 1 is **“ -- ”**, motor 2 is **“ --. ”**, and double gates will show **“ -.-. ”**
4. When the motor is running at high speed and triggering the overload protection, the digital display will show motor 1 is **“ OH ”**, and motor 2 is **“ OH. ”**, and double gates will show **“ O.H. ”**
5. When the motor is running at slow speed and triggering the overload protection, the digital display will show motor 1 is **“ OL ”**, and motor 2 is **“ OL. ”**, and double gates will show **“ O.L. ”**
6. When the motor reaches max working time, the digital display will show motor 1 is **“ EC ”**, and motor 2 is **“ EC. ”**, and double gates will show **“ E.C. ”**
7. When the safety beam is activated, the digital display will show **“ PH ”**
8. When the gate is opened fully, the motor 1 will show **“ LO ”**, and the motor 2 will show **“ L.O ”**
9. When the gate is closed fully, the motor 1 will show **“ LC ”**, and the motor 2 will show **“ L.C ”**
10. When the battery voltage is low, it displays **"L1"**, and when the battery voltage runt out, it displays **" Lb "**.

Motor direction identification:

When the motor is running, if the motor direction LED indicator is **blue**, now the motor should be in **“opening”** operation. When the motor direction LED indicator is **red**, the motor should be in the **“closing”** operation.

If the gate stops halfway through opening, please increase the overcurrent value in the low speed and high speed.

If the gate was opened or closed fully, but the open or close indicator LED didn't turn off right now, please reduce the low speed overcurrent values of the corresponding motor.

Item	Function description	Range	Default	Explanation
P0	Motor 1 overcurrent setting in slow speed	0~20 Class	10 Class	Motor overcurrent setting in slow / high speed, the bigger the value is, the harder the motor to stop. Setting value from 0-20
P1	Motor 1 overcurrent setting in high speed	0~20 Class	10 Class	
P2	Motor 2 overcurrent setting in slow speed	0~20 Class	10 Class	
P3	Motor 2 overcurrent setting in high speed	0~20 Class	10 Class	

Reset the system

If you need to reset the system, please enter the digital display menu setting, select the **Po**, and press the **[Inc/Smart]** to increase the value to **5,** then press the **[Fun]** to store it. The system will reset.

NOTE: If you use it for a single gate, please connect the Motor 2 only. After you reset the system, the PG mode of the control panel menu needs to be set to 1 (single motor).

How to Operate

The user may operate the opener once all adjustment setting is finished.
With the gate in its closed position, press and release the remote control, the gate will move to the programmed opening position and stop.
With the gate in its opened position, press and release the remote control, the gate will move to the programmed closing position and stop.
While the gate is moving, press and release the remote control, the gate will stop moving immediately.
The next command from the remote will reverse the gate direction and the gate will stop at its programmed opening/closing position.
The gate will stop in case of obstruction during opening. The command from the remote control will reverse the gate direction and the gate will stop at its programmed closing position.
The gate will reverse in case of obstruction or stall force during closing, and it will move to the programmed opening position.

Maintenance

Warning: Please disconnect the power before repairing.

1.Wipe the gate opener shaft with a clean, dry cloth, and then use silicone spray to reduce friction. In cold climates where the temperature reaches 1°C (30°F) or lower, spray silica gel on the actuator every 4 to 6 weeks to prevent freezing.

2.Regularly check the gate hinge to ensure that the gate swings smoothly and freely. If necessary, use grease on the hinges.

3.Check your installation regularly. If the hardware and posts will be replaced, the bracket may need to be adjusted, or the hardware may need to be tightened.

4.Maintain the area around your gate. Keep these areas free of objects that can prevent the gate from swinging freely. Note: If a malfunction is observed or sus- pected, inspection and service should be carried out in short time. It is recommend- ed to take a multimeter to the operator when working on site.

Warranty Ordinance

1. To repair against this warranty card and invoice during the warranty period.
2. Warranty period: 1 year after the date of invoice.
3. Without unathorized dismanting,any product broken or damage due to quality problem.we'll offer the repair service for free or replace for free.
4. The malfunction and damages caused by incorrect use or man fault is not CoV-ered by this warranty.

Check Date	Check Content	Maintained by

Trouble Shooting

Problems	Possible Reason	Solutions
The gate doesn't open or close properly, and LED in the control board doesn't light.	1.The power is off. 2.Fuse is burn. 3.Control board is wrongly power wired.	1.Switch on the power supply. 2.Check the fuse,change it if it burnt. Please refer to page 16. 3.Re-wiring according to instruction.
The gate does not stop when moving to the open or closed position, and the LED of Motor 1 and Motor 2 on the control board does not turn off.	The motor's overcurrent value is too high.	Reduce the motor overcurrent parameters (P0, P1, P2, P3). For example, decrease by 2 levels each time until the gate operates normally.Failure to do so will shorten the service life of the motor.
How to restore factory settings.	Restore factory settings	1. Long press **[Fun]** to enter the menu and select the mode Po 2. Short press **[Fun]** to confrm, the display shows **"-"**.
Gate is opened or closed fully, but the indicator LED doesn't turn off.	The motor's overcurrent in low speed is too bigger.	1. Please reduce the motor's over current value in low speed.
Power on, the status indicator light is off and the menu does not display any information.	Fuse is burn.	Check the fuse,change it if it burnt.

Feedback & Review

Your comments and suggestions are important to us
as they help us provide the best possible service.

Should you encounter any issues, please do not worry or get frustrated.Feel free to reach out to us. **Be sure to provide photos or videos showing your problem as well as the wiring diagram of control board**, so we can resolve your issues much faster.

If you need to contact us, please prepare the following information: product model, purchase date & purchase site, order number and your contact information.
All your concerns will receive a reply.

Email: **JUJIANGservice@outlook.com**