Sliding Gate Opener
User Manual

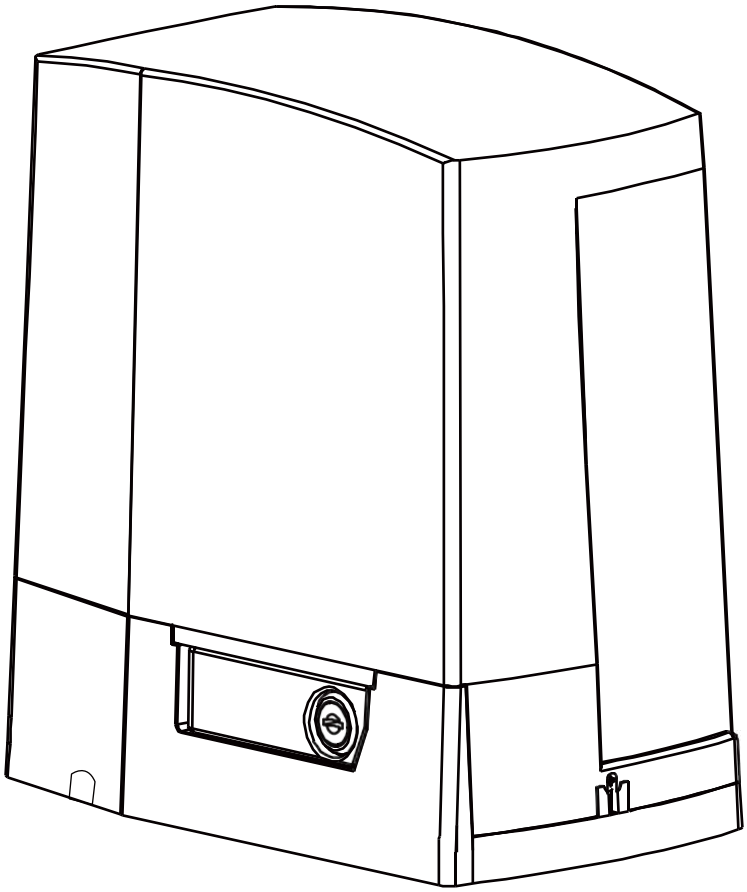

Email: smart03@x-house.net

★ Thank you for purchasing this product

★ Please read and follow all warnings, precautions, and instructions before installation and using

★ Periodic checks of the opener are required to ensure safe operation

★ Keep the manual for future reference

Feedback & Review

Your comments and suggestions are important to us
as they help us provide the best possible service.
Should you have any need to contact us, the info below will help you get in touch

INSTALL ATION STEPS CONTACT US

Kindly include your Product Model, Purchasing Date & Site, Order#, and your contact information.All your concerns will be replied.

Email: smart03@x-house.net
Whatsapp: +86 13328529638

Scan the QR code for user manual download and video instructions

Table of Contents

General Safety 1

Preparation for Installation 2

Sliding Gate Opener Part List 3

Technical Specification 5

Feature 5

Installation Overview 6

Control Board 10

Remote Control 14

How to Program or Erase the Remote 14

Control Board Function Description 15

Control Board Parameters Setting 18

How to Operate the Gate Opener 20

Smart gate opener operation instruction 20

Trouble Shooting 28

Contact Us 29

General Safety

Warning: Incorrect or improper use of this product can cause damage to persons, animals or properties.

- Please ensure that the input voltage used matches with the supply voltage of gate opener (AC220V±10%50Hz).
- All modifications to wiring or electrics, and any adjustment or maintenance to AC 220V MUST be done by a qualified electrician.
- To avoid damaging gas, power or other underground utility lines, contact the relevant authority BEFORE digging.
- All potential hazards and exposed pinch points of the gate must be eliminated or guarded prior to installation of this gate motor.
- Never mount any device that operates the gate motor where the user can reach over, under, around or through the gate to operate the controls. These must be placed at least 1.8m from any moving part of the moving gate.
- Ensure power plug is disconnected from the power socket during installation or maintenance.
- Keep remote control and other control devices out of children's reach, in order to avoid unintentional activation.
- Never allow anyone to hang onto the gate while moving.
- To ensure safety, before installing the main motor, make sure Gate End Stop and a Gate Stopper mounted at each end of the rail to prevent the gate travelling off the track.
- If required, install infrared photocells to detect obstructions and prevent injury or damage.
- Instruct all users about the control systems provided and the manual opening operation in case of emergency.
- Do not install the product in an explosive atmosphere or where there is any danger of flooding.
- This product was exclusively designed and manufactured for the use specified in the present documentation. Any other use not specified in this documentation could damage the product and be dangerous.
- Only use original parts for any maintenance or repair operation. We decline all responsibility with respect to the automation safety and correct operation when other supplier's components are used.
- The user must avoid any attempt to carry out any works or repairs on the motor, and should always request the assistance of qualified personnel.
- This motor is suitable for use on one sliding gate only.
- Anything which is not expressly provided for in these instructions is not allowed and will void warranty.
- Dispose of all packing materials (plastic, cardboard, polystyrene etc.) according to current guidelines.
- Save this manual.
- Any questions please contact with us by email address:**smart03@x-house.net** All your concerns will be replied.

Preparation for Installation

Before proceeding to your opener installation, check if your gate structure is in accordance with the current standards, especially as follows:

The gate sliding track is linear and horizontal, and the wheels are suitable， the gate should be mounted and moving freely. Check that the structure is sufficiently strong and rigid. Make sure that the gate is plumb and level. The fence posts must be mounted in concrete. The gate does not bind or drag on the ground. The opening and closing gate stops are positioned.

WARNING: Remember that control devices are intended to facilitate gate operation, but can not solve problems due to any defects or deficiency resulting from failure to carry out correct installation or maintenance. Take the product out of its packing and inspect it for damage. Should it be damaged, contact your dealer. Remember to dispose of its components (cardboard, polystyrene, nylon, etc.) according to the current prescriptions.

Refer to the following Figures for gate installation.

Using the post or wall as a stop, either directly or indirectly, is not recommended so as to protect the post or wall against damaging shock from the sliding gate

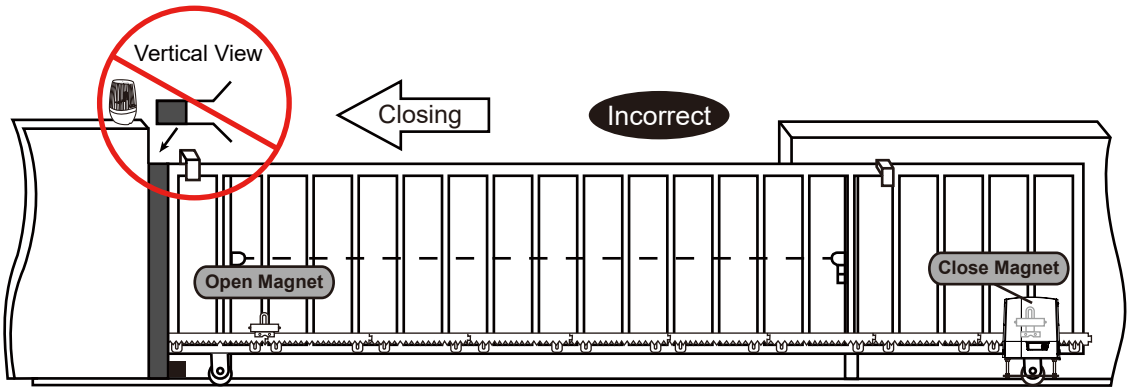

In sake of safety, a positive stop must be mounted on the two gate stop of ground track.

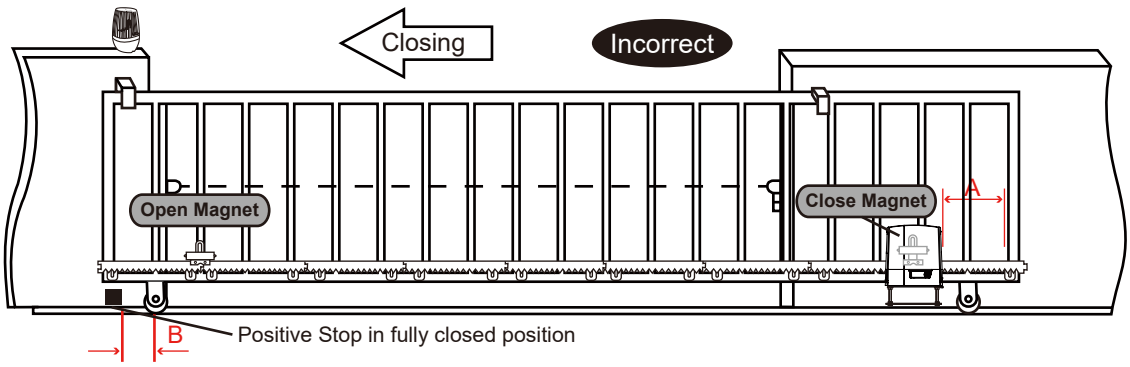

Keep the 3” distance at least between operator and chain bracket if the roller hit the Positive stop in an accident.

A-B≥3”

It is suggestion that there is a 4”(10cm) distance at least between the gate edge and the gate wall when the gate is fully open.

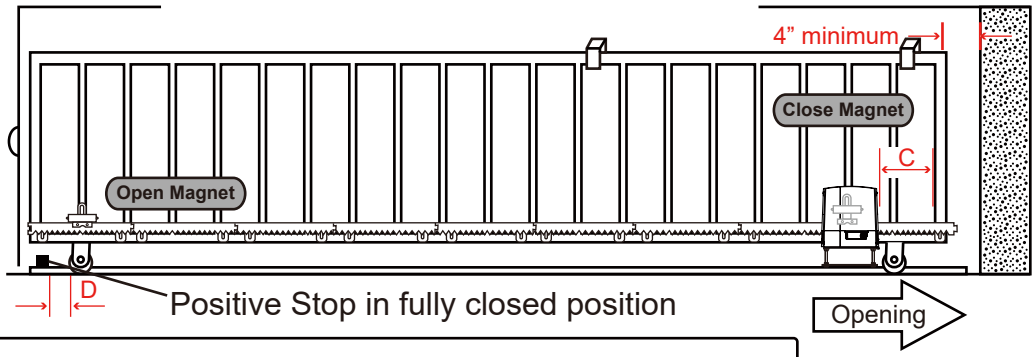

Keep the 3” distance at least between operator and chain bracket if the roller hit the Positive stop in an accident.

C-D≥3”

Sliding Gate Opener Part List

Main Components			
Item	Name	Qty.	Image
1	Main Unit	1	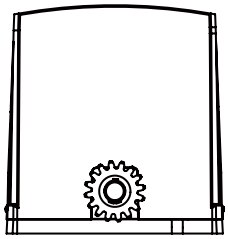
2	Motor to Mounting Plate Screws	4	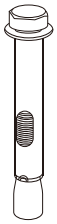
3	Clutch Keys	2	
4	Remote Controls	2	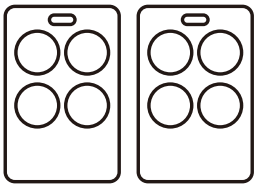

Main Components

Item	Name	Qty.	Image
5	Nylon Gear Rack	12	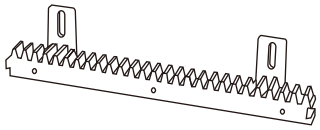
6	Adjustable Motor Height Plate	1	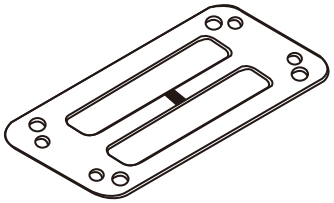
7	Flat Spacer for Adjustable Height	2	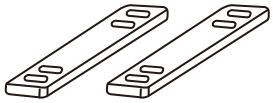
8	Hexagon Socket Screws	4	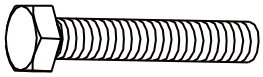
9	Screws	12	
10	Flat Washers	4	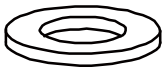
11	Spring Washer	4	

Magnetic Limit Switch Components

Name	Qty.	Image
Magnet Limit Assembly	1	

• Accessories Parts (Included in some models, refers to the actual package)

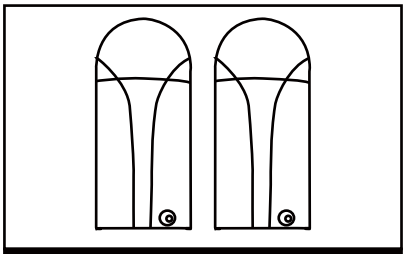

Photocell Sensor

• Optional Accessories Parts List

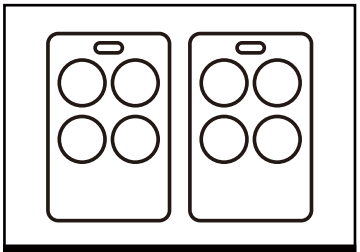

Remote Control

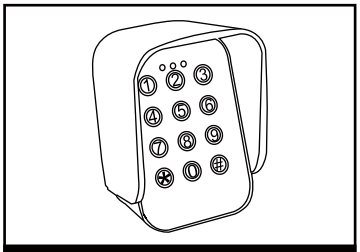

Wireless Keypad

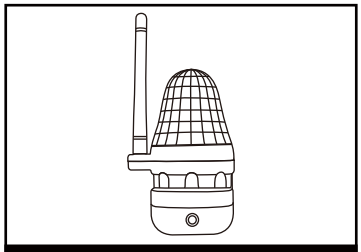

Flash Lamp

Technical Specification

Model	PYM-K1800	PYM-K2700
Max. Weight of Gate	600kg	1000kg
Motor Power	370W	550W
Photocell Sensor	Included (1 Pair)	
Power Supply	AC220V±10%50Hz	
Gate Moving Speed	40 ft/min	
Limit Switch	Magnetic Limit Switch	
Working Duty	S2, 20 min	
Max. Paired Remote Controls	128	
Frequency	433.92 MHz（Custom Rolling Code）	
Working Temperature	-20°C ~ +70°C	

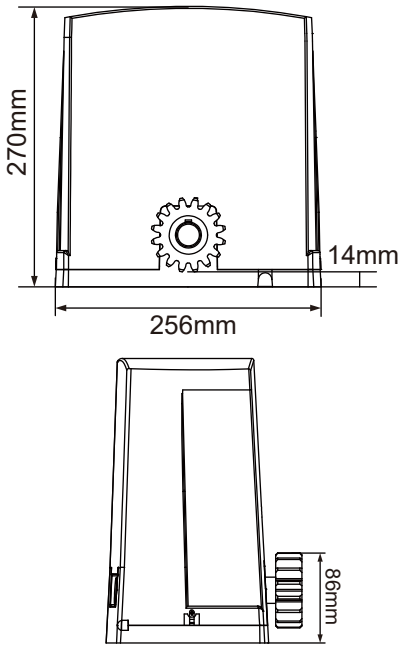

Feature

- Stylish appearance design and built-in control panel integrated inside the mechanism, no external controller or receiver needed.
- Built in limit switch allowing the motor to switch off once the cycle is finished.
- Built in manual override with 2 manual release keys in case of emergency or power failure.
- The motor is constructed of all metal gears make it durable and long lasting.
- Soft start and slow stop
- Setting parameters in the smart phone APP, includes overcurrent detecting, auto-closing timer, remote buttons function, etc
- Stop/Reverse in case of obstruction during the gate is opening and closing.
- Pedestrian mode.
- Easy installation, firm and solid structure, stable and reliable driving, permanently lubricated, low maintenance.

Installation Overview

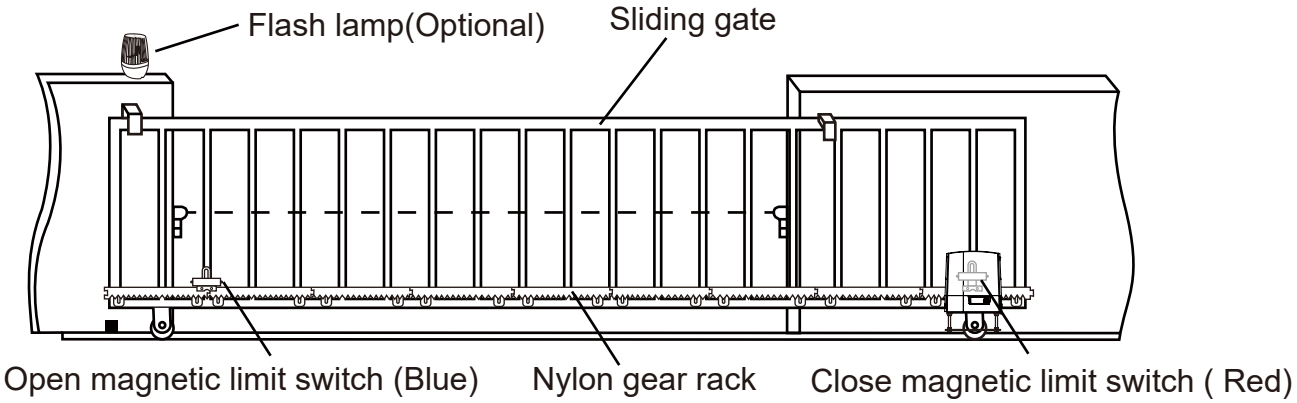

Diagram 1

Any works done to the motor must be completed whilst the power is off, and the motor is unplugged.

• Motor mounting position diagram

Factory default the motor must be mounted on the right hand side of the gate. And the gate motor will open the gate to the from the left-hand to the right-hand side. (Refer to diagram 2)

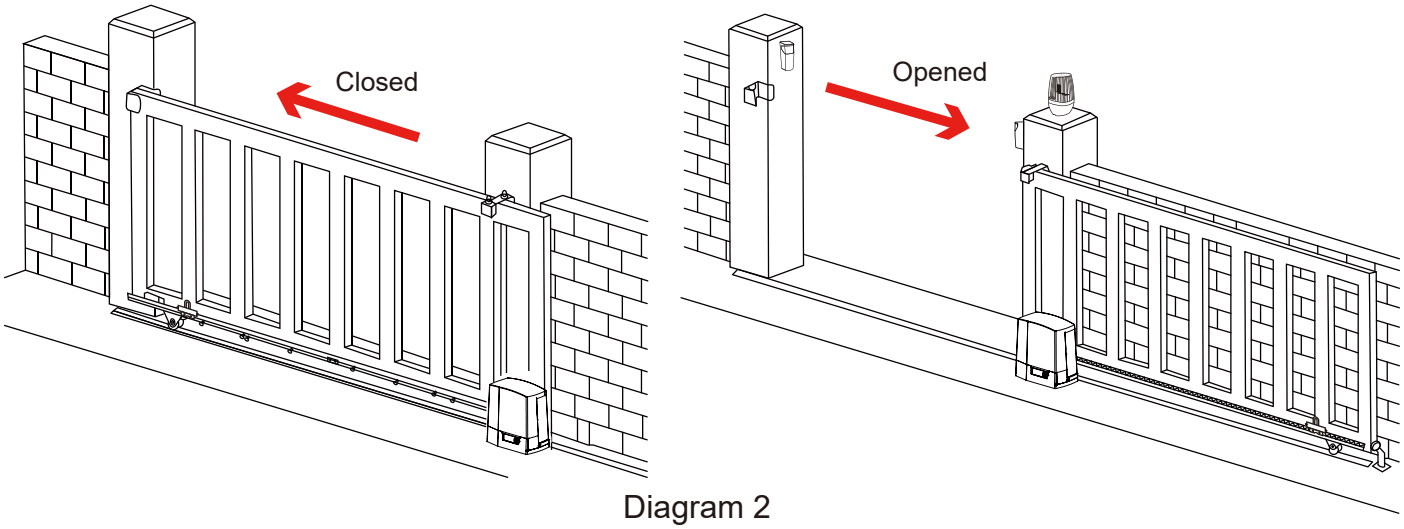

Diagram 2

If your want to open the gate from the right-hand to the left-hand side (refer to diagram 3), please mount the motor on the left-hand side as shown. Please enter the digital display menu to set the parameter J2 value from 0 to 1 and set F1 value from 0 to 1. That will help you to switch the motor running direction.

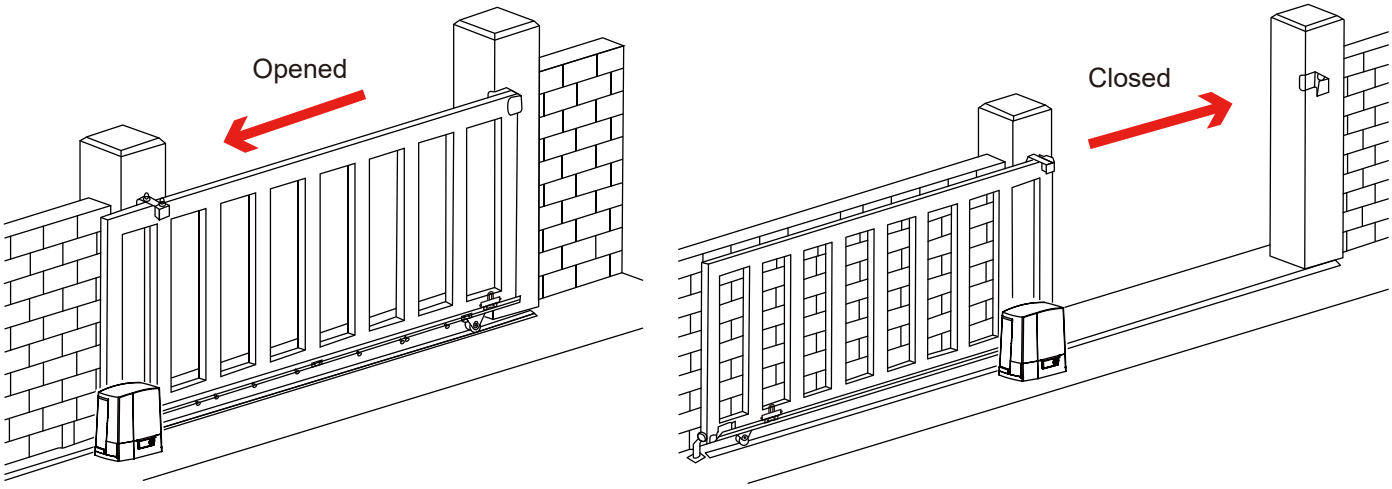

Diagram 3

Step 1. Gate preparation

Ensure that the sliding gate is correctly installed.
The gate is horizontal and level and the gate can glide back and forth smoothly when moved by hand before installing the gate opener.
Wheels and guide rollers should rotate easily and be free from dirt or grime. Track should be flat, level and firmly affixed.
Any misalignment in the gate will affect performance of the automatic gate opener.

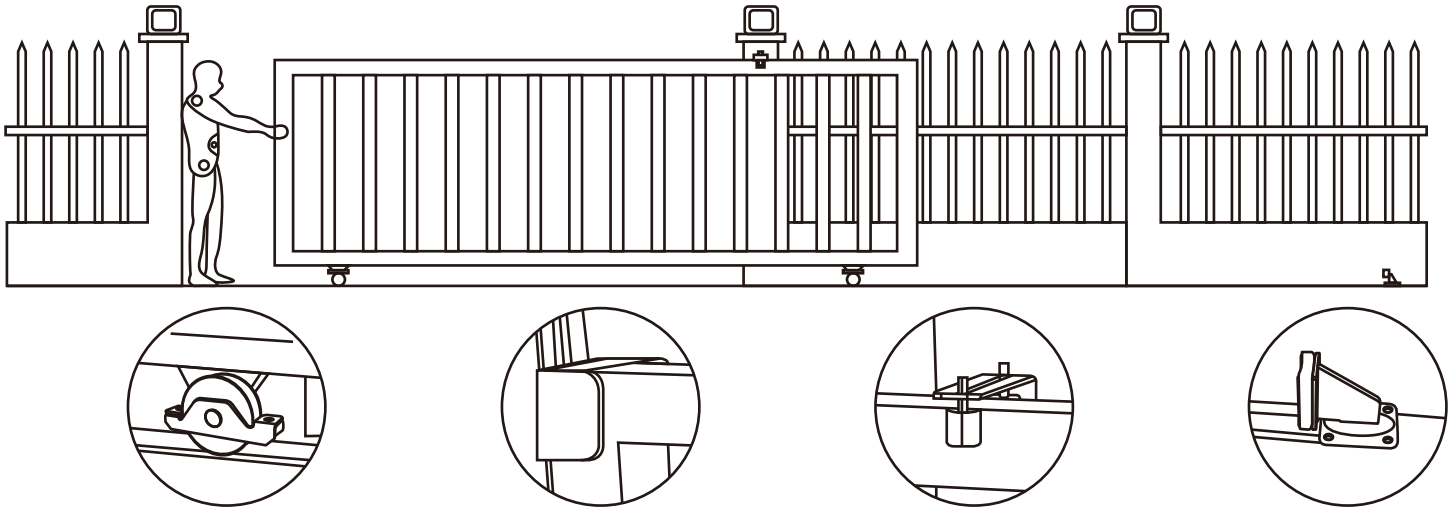

Gate Track and Track Wheels | Gate End Catch | Gate Guide Rollers | Gate Stop

Diagram 4

The gate should slide smoothly by hand before attempting to install the gate opener.

Step 2. Installation of motor

1. Dismantle the motor's plastic housing before installation and keep relevant fasteners properly.
2. Prepare the power line for connection of the mounting plate and the motor.
3. Insert the key and open the manual release bar by turning it 90° (Diagram 5) to put the motor into manual mode. Check that the motor gear rotates freely by hand.

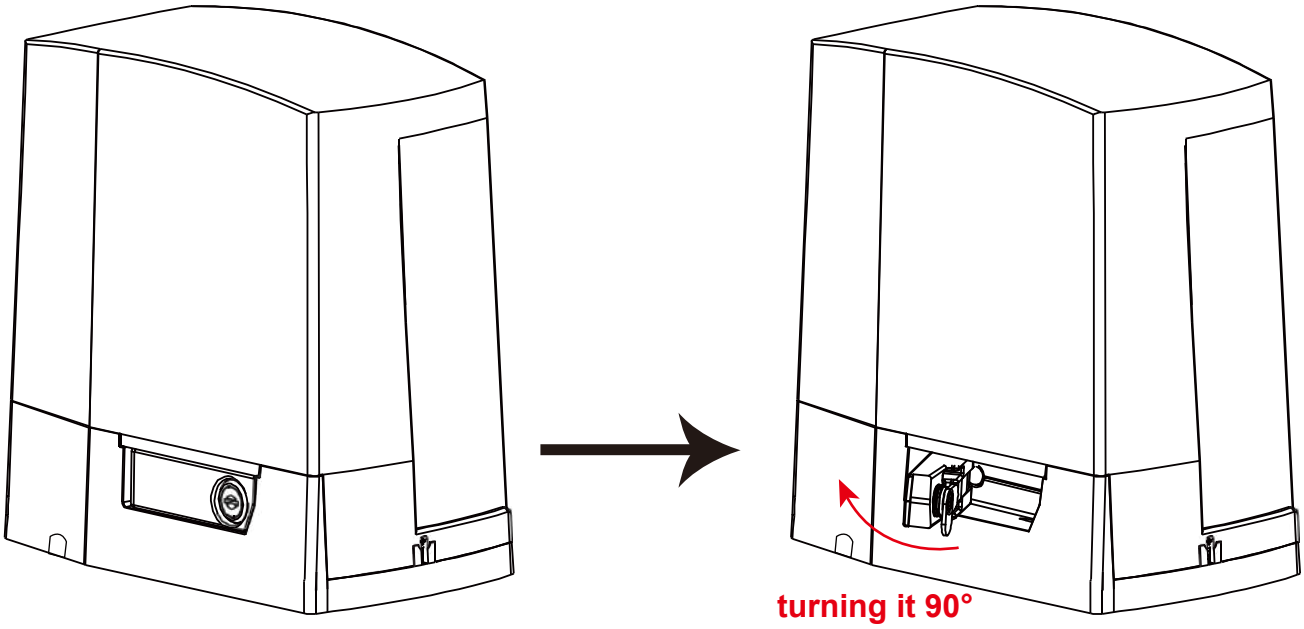

Insert key. rotate 90 degrees

Diagram 5

Releasing arm in torsion,wriggle 90 degrees gate operator will be in releasing state

4.Assemble the adjustable plate base if you need to use it to adjust the motor mounting height to match the gear rack installation height.(see diagram 6)
5.Mount the motor onto the adjustable height plate, ensuring the power cable is positioned into the end slot of the plate in the direction of the power point, make sure there are no pinch points.

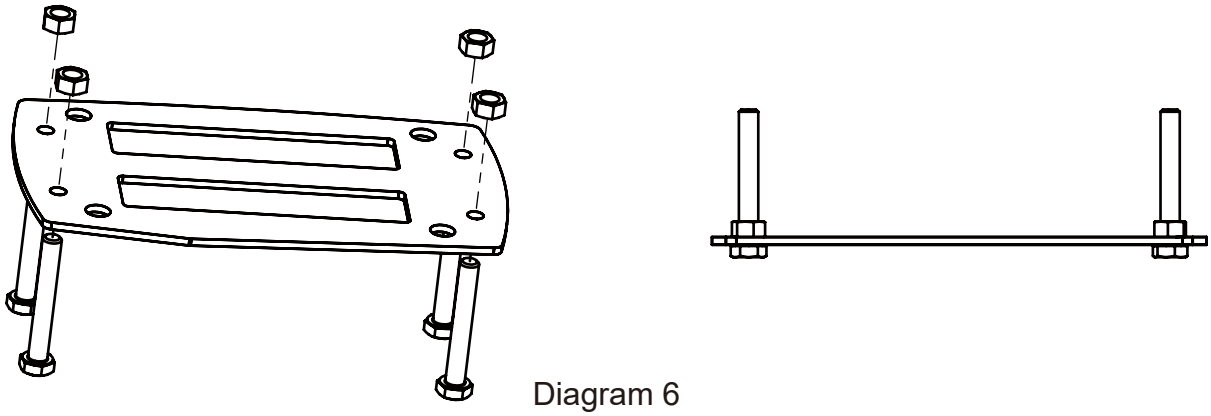

Diagram 6

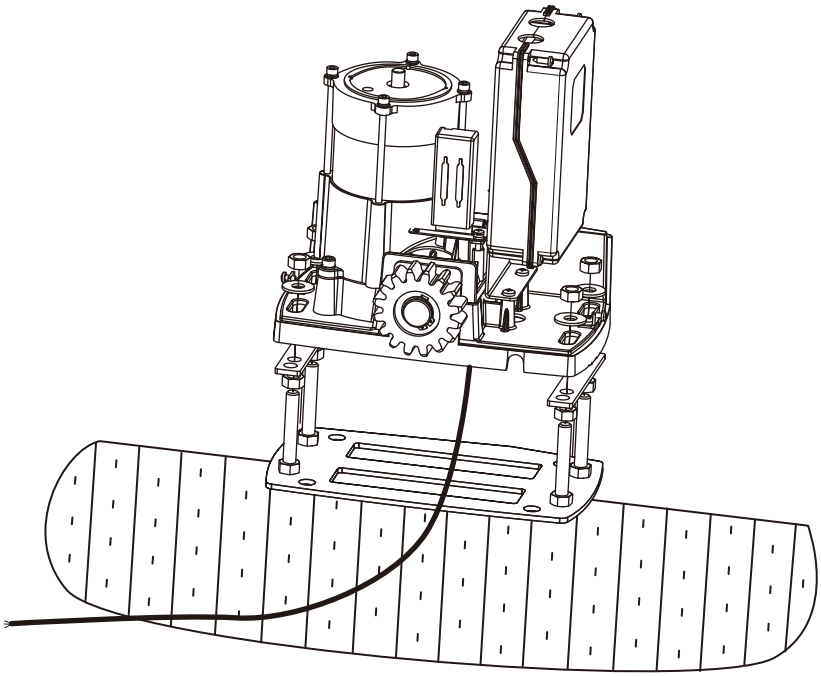

Diagram 7

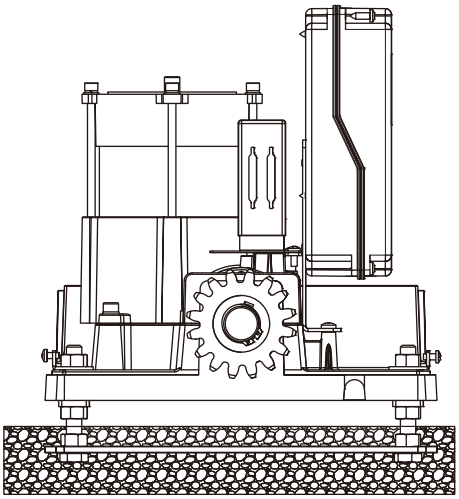

Diagram 8

Step 3. Installation of gear rack

1.After the motor is installed,the racks teeth the down, then put it on the gear of motor and lock them in the gate by screws. Push the gate manually to test whether the motor can move smoothly. If yes, tighten the screws to fixed the gear rack in the gate.

2.Gear rack adopt unit assembly, in order to avoid gate running jitter or jammed, rack and joint clearance must be corrected. Suggest use this way (see diagram 9) with a small correction of the rack, after connecting right with racks 1 and racks 2, then fixed racks 1 and 2. There are snap-in slots at both ends of the nylon rack, just snap it in.

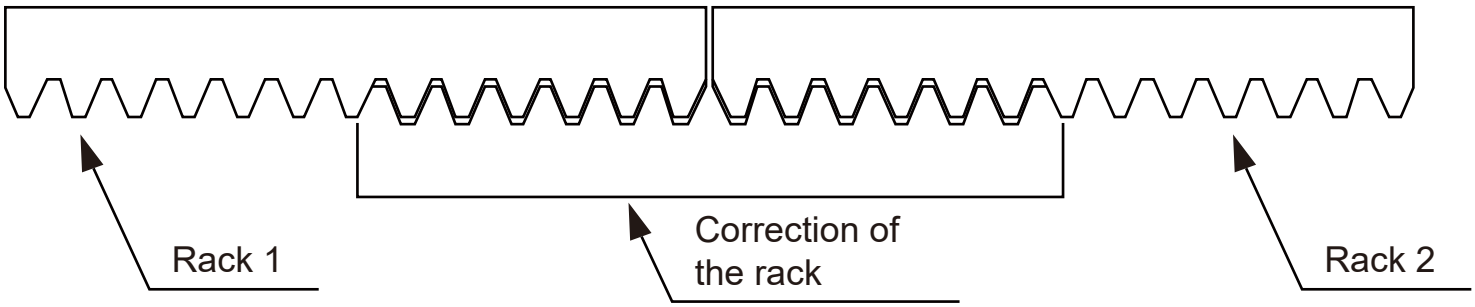

Diagram 9

Step 4. Installation of 2pcs magnet limit switch

Factory supplied 2pcs magnet limit switch with bracket, they are red and blue. 2pcs brackets should be installed one at either end of the gear rack. See Diagram 10.

For installing 2pcs magnet limit switch and brackets in the correct position, please release the clutch manually on the motor (see diagram 5) and open the gate in position by manual.

- Install the blue magnet limit switch with bracket on the gear rack and match the magnet limit switch of motor.

- Pull the gate to the middle position.

- Power on the motor, press the "Open" button on the remote, the motor will running but doesn't drive the gate and the "Open" indicator LED will lit up on the control board.

- Open the gate in position again by manually, if the motor stops running at same time, install the blue magnet limit switch successful. If not, please adjust the blue (open) limit switch position to make sure while you open the gate in position again, the motor will stop running. Power off the motor. Then fixed the bracket and tighten the screws.

- Close the gate in position manually. Install the red magnet limit switch with bracket on the other side of gear rack to make sure the red limit switch can match the magnet limit switch of motor.

- Push the gate to the middle position.

- Power on the motor again, press the "Close" button on the remote, the motor will running but doesn't drive the gate and the "Close" indicator LED will lit up on the control board.

- Close the gate in position again by manually, if the motor stops running at same time, install the red (close) magnet limit switch successful. If not, please adjust the red limit switch position to make sure while you open the gate in position again, the motor will stop running. Power off the motor. Then fixed the bracket and tighten the screws.

When you are satisfied both limit switch are in the correct position, power off the motor, tighten the screws to fixed 2pcs bracket on the gear rack and insert the manual release key to the clutch and close the clutch door. Power on the motor, press the remote control to check the gate opens and closes in position. Adjust the limit magnet if necessary.

Diagram 10

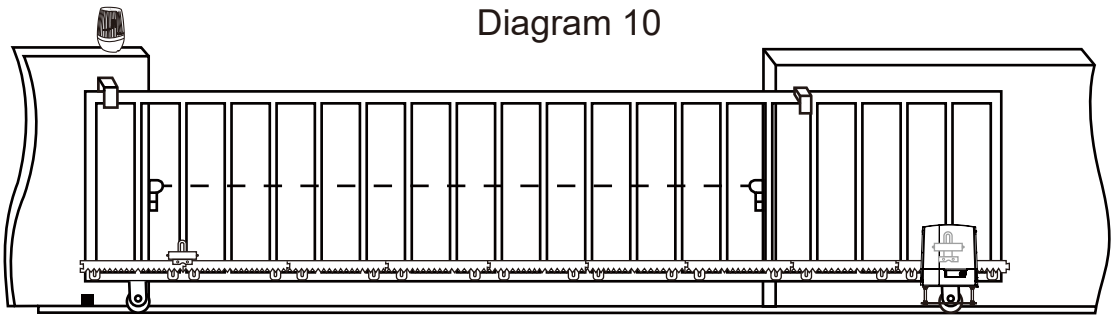

Control Board

• Technical parameters

1. Power supply: AC220V±10%50Hz
2. Application: AC sliding gate opener
3. Remote control: Rolling code
4. Remote control memory: max support 128pcs.

• LED Indicator Information

1. State indicator: Power on the control board, the red LED will keep lit up.
2. RF indicator: While the user is programming, removing or operate the remote control, it will flash quickly.
3. Smart indicator: It will show the work state of smart module.
4. Motor indicator: While the gate is opening, the blue LED will lit up. While it is closing, the red LED will lit up.
5. Limit switch indicator: While the gate arrives at the open position, the blue LED will lit up. While it arrives at the close position, the red LED will lit up.

• Terminal and buttons instruction

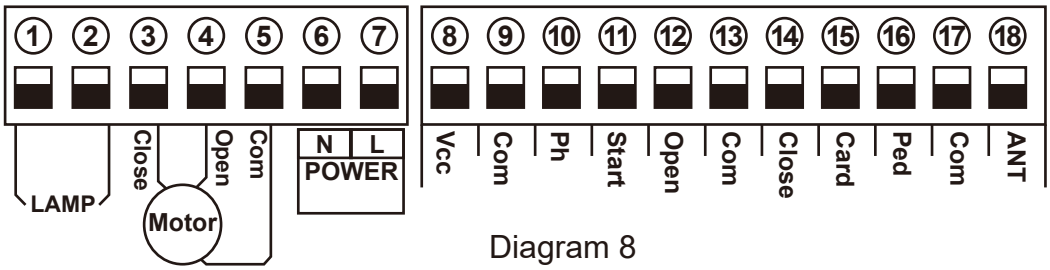

Diagram 8

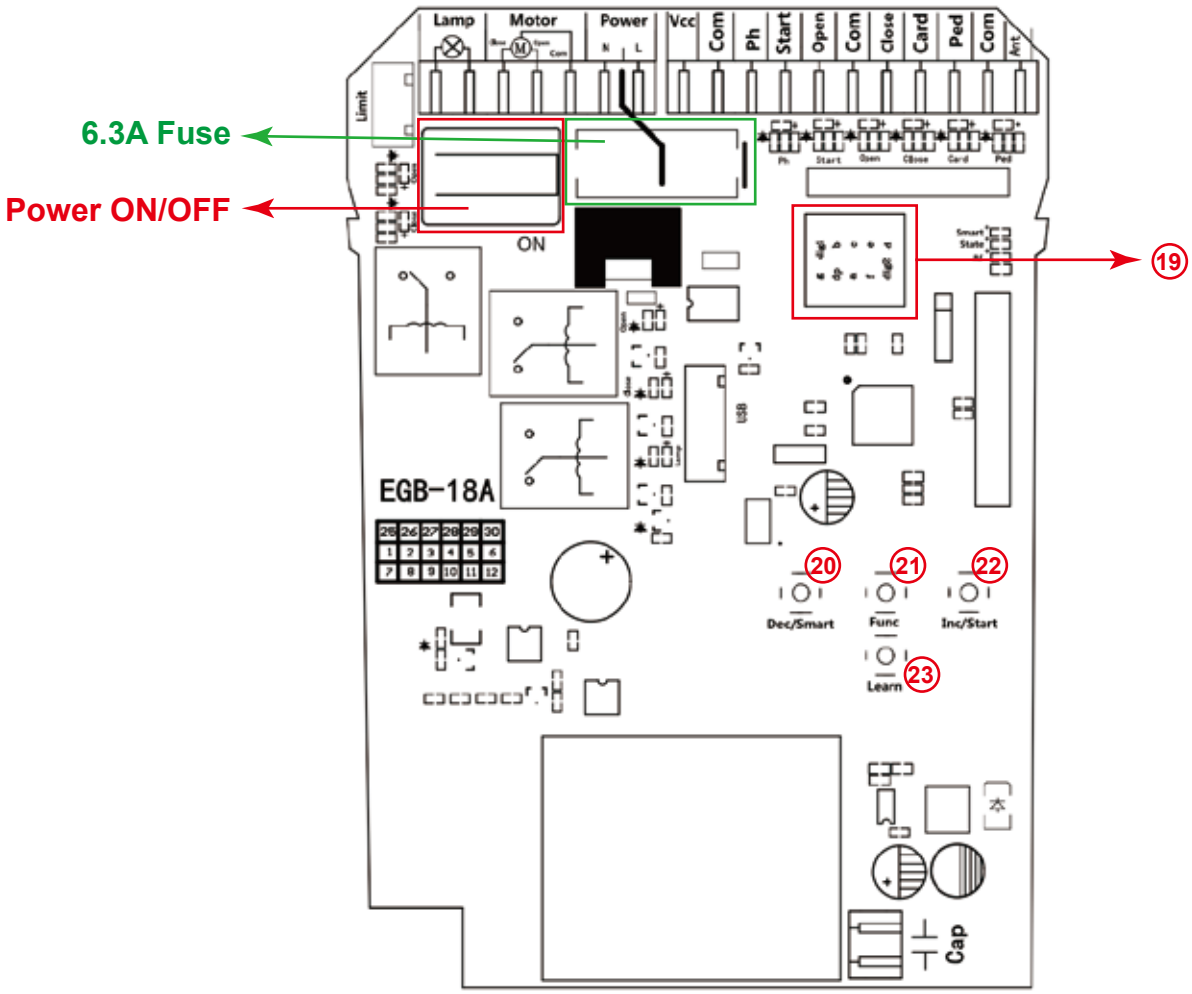

1&2. Lamp: used to connect with flashing light, output voltage is AC 110V/220V.
3&4&5. Motor: used to connect with sliding gate motor's wire.
6&7. Power: used to connect with AC 110V/220V power.
8.Vcc: DC 12V output used to connect with external devices, max 200mA.
9.Com: used to connect with **COM** terminal or **GND**.
10.Ph: used to connect with the photocell sensor.
11.Start: It is a single button control mode switch for controlling the gate by "open-stop-close - stop - open..." **cyclically**.
12.Open: used to connect with any external devices that will operate to open the gate.
13.Com: used to connect with **COM** terminal or **GND**.
14.Close: used to connect with any external devices that will operate to close the gate.
15.Card: used to connect with any external devices that will operate to open the gate.
16.Ped: Pedestrian mode signal (gate open signal) input port.
17.Com: used to connect with **COM** terminal or **GND**.
18.ANT: antenna connection.
19.Digital display: It is for showing you the setting data.
20.DEC/SMART: used to figure decrease of setting the data or operating the smart module.
21.FUN button: Used for enter the menu setting and confirm the data.
22.INC/START: used to figure increase of setting the data or operating the single button control mode.
23.LEARN button: It is for programming/erasing the remote control.

• Control board wire diagram

1.Install the motor on the right-hand of gate

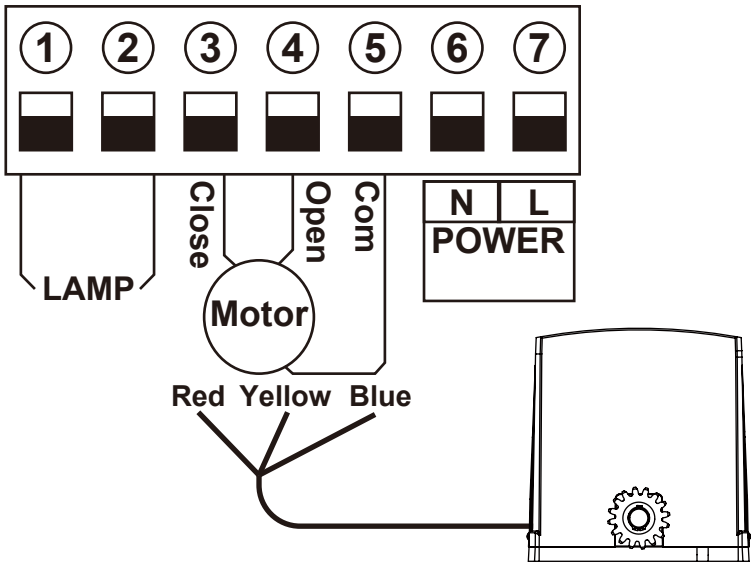

Terminal ③, ④ determines the forward and backward direction of the motor
Terminal ⑤ is for connecting with Com(GND)

Please note: Our factory setting is install motor on the right-hand of gate! When you want to install motor on the left-hand of gate, please enter the digital display menu to set the parameter J2 value from 0 to 1 and set F1 value from 0 to 1. Please follow the operation on page 17-18.

2.Connect with flash lamp

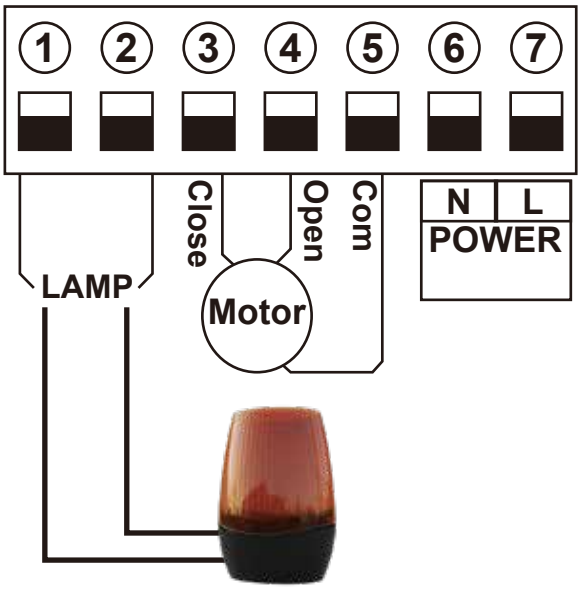

Terminal ① and ② is for connecting with the flash lamp.

3.Connect with safety beam

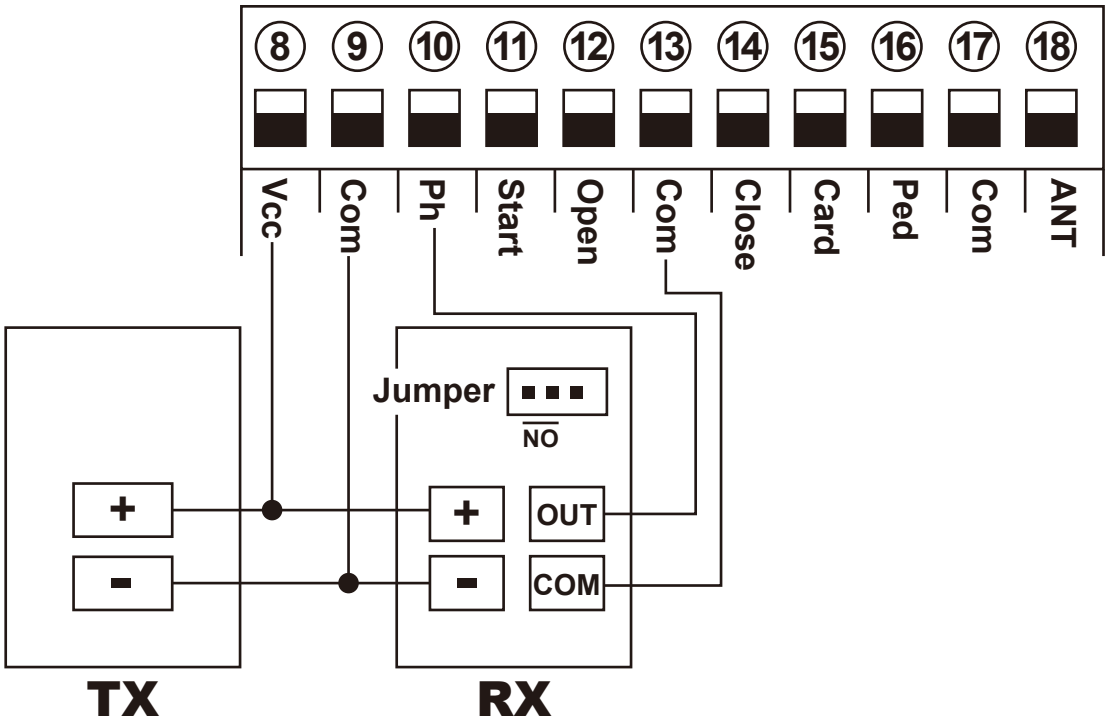

Connect terminal ⑬ with the “COM” of photocell RX.
Connect terminal ⑩ with the “OUT” of photocell RX.
Connect terminal ⑧ with the “+” of photocell RX and TX.
Connect terminal ⑨ with the “-” of photocell RX and TX.

4.Connect with start terminal

Start terminal is used for connecting with some external devices , such push button, wired keypad, receiver etc. Control gate by “ **open-stop-close-stop...**” mode

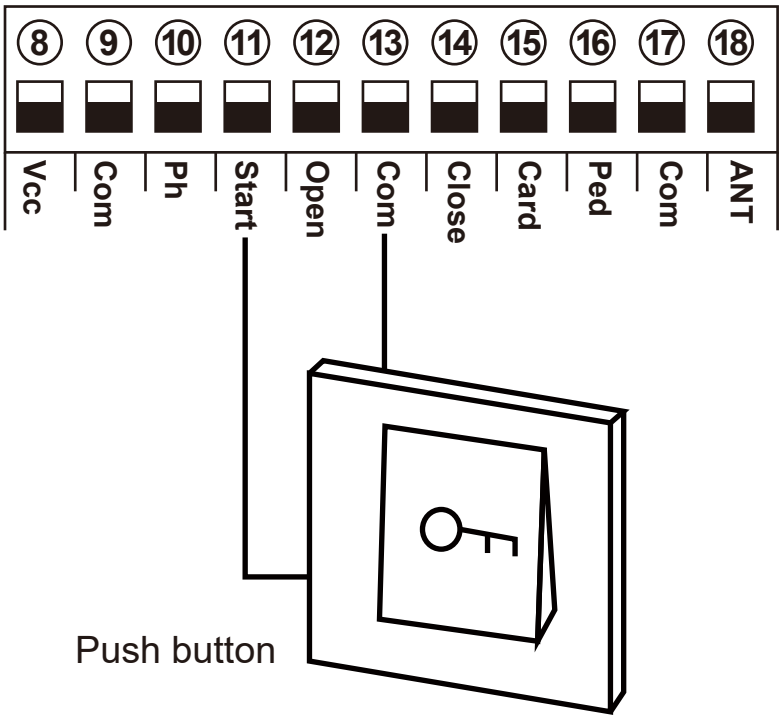

Terminal ⑪ and ⑬ are for connecting with the push button.

Note! If you connect the swipe card or wired keypad, etc devices, please also connect with ⑧ Vcc and ⑨ Com to get the power supply.

5.Connect with swipe card

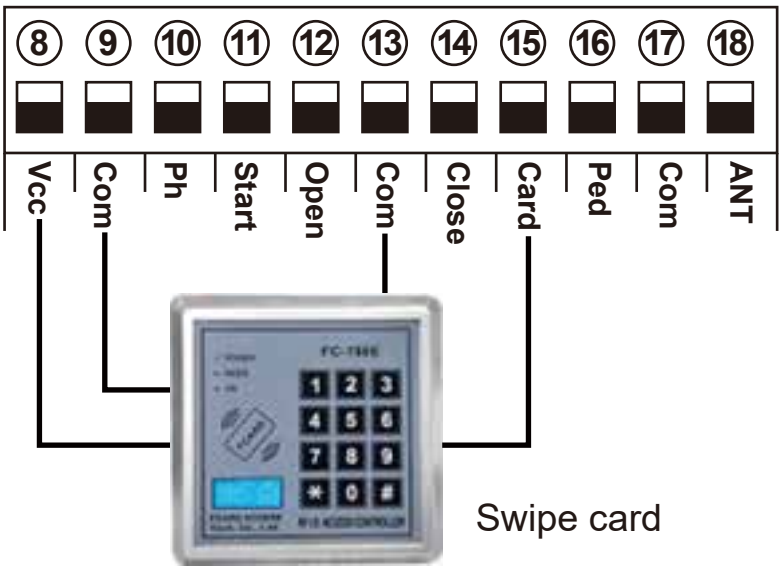

Terminal ⑮ is for opening the gate only, for external device such swipe card, wired keypad etc. Terminal ⑮ and ⑬ are for connecting with the swipe card. Terminal ⑧ and ⑨ are for supplying the power to the swipe card.

6.Connect with loop detector

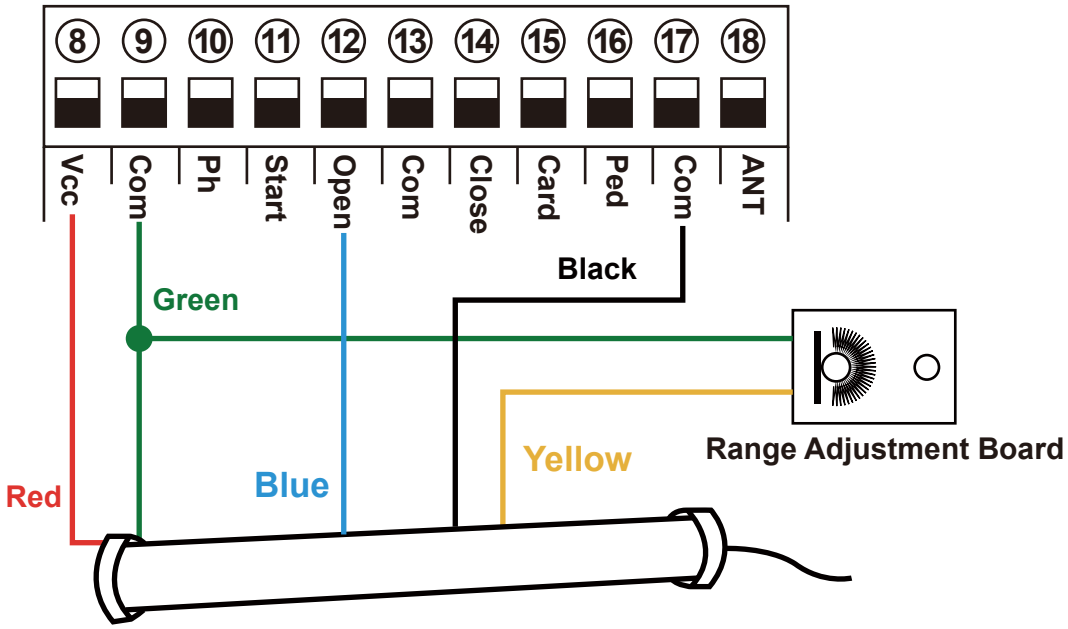

7.Loop detector wire information:

Definition of the 5 –core cable:

RED →Input Voltage (+)
GREEN →Ground/Common (-)
BLACK →Relay's Common
BLUE →Relay's Normally Open
YELLOW →Range adjustment potentiometer (POT)

Red wire: connect with terminal ⑧.
Green wire: connect with terminal ⑨ and range adjustment board.
Black wire: connect with terminal ⑰ .
Blue wire: connect with terminal ⑫ .
Yellow wire: connect with range adjustment potentiometer.

Remote Control

Each remote has 4 buttons, can set them with different work mode independently through the digital display menu L1, L2, L3 and L4,

0: No function.
1: Open-Stop-Close...
2: Pedestrian mode.
3: Open only.
4: Close only.
5: Stop only.
6: Turn auto close off via remote.

How to Program or Erase the Remote

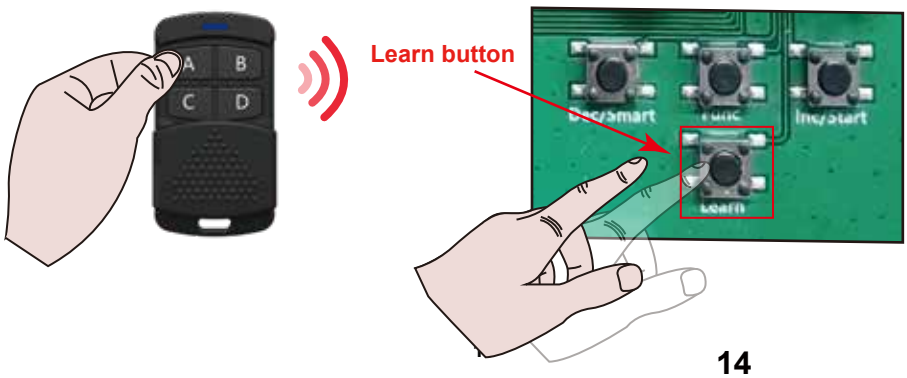

● Program the remote: Short press learn button then release, the LED indicator will lit up. Now the user needs to press the button from the remote control, and the buzzer sounds a short beep, which means the programming is successfully, and the digital LED will show the quantity of that remotes were learned.

After the user pressed the learn button, within 8 seconds, if the controller doesn't receive the signal from the remote, the controller's LED indicator will turn out andexit the code learning state.

Note: Due to the digital display only can show two digital numbers, if the controller already learned more than 99pcs remote, from the 100th remote, the digital display will show A to replace the ten and hundred digits. Such as the 100th remote will show A0, and the 101st remote will show A1. If the controller already learned more than 109pcs remote, from the 110th remote, the digital display will show b to replace the ten and hundred digits. Such as the 110th remote will show b0. And the 120th remote will show C0.
Max capacity: 128pcs remote. If the digital LED show "- -" with a buzzer short beep5 times, then means can not learn more remotes.

● Erase the remote: Press and hold the learning button for 6 seconds, until the buzzer sounds a long beep, then release the button, and the digital display show "00". Now all remotes can not control the gate.

Control Board Function Description

Item	Description
Power on	After the control board powered on, the buzzer will sound, and the Menu will show model number and version,and the state indicator LED will lit up.
Open/close gate indicator LED	While the gate opener work normally, opening the gate will turn on blue, close the gate will turn on red.
Auto travel learning	The newly installed motor needs to operate the auto travel learning once before the high and low speeds can be normally allocated. After auto travel learning completed, the gate motor will automatically allocated the high and slow speed. The high and slowspeeds for opening and closing can be set through the digital display menu. 1. Before starting the auto travel learning, the gate must be fully closed. 2. Enter the menu, select Pr, set 5, and confirm to start the auto travel learning. 3. The gate will automatically open and close to remember the travel time. 4. Setting Motor slow speed running time for opening and closing separately by the menu. The larger the value, the more slow speed running time. During the process, if any control occurs, such as trigger RF control, PED/Ph port, etc., the auto travel learning will be interrupted and the learning operation needs to be restarted. If the auto travel learning fails halfway, the buzzer will sound twice, and the learning will be long once if the learning is successful.
Setting slow speed running time	After completed the auto-travel learning, the gate opener will automatic set the slow speed running time for opening and closing from 0 - 5 levels. The bigger the value is, the more slow speed running time. 0 means No slow speed running time.

Overcurrent	The overcurrent function can achieve an anti-smashing car. While the gate is opening, it detects the overcurrent and stop. If the gate is closing and detects the overcurrent, the user can set different response modes through the digital display menu. 0: reverse back to the opened position. 1: reverse to open the gate for 1 second. 2: reverse to open the gate for 3 seconds. 3: stop. Setting overcurrent for opening and closing the gate by the digital display menu.
Limit switch mode	1. When the gate is fully opened/closed, and trigger the limit switch, the motor will auto stop. 2. To prevent overrun caused by gate motor inertia after reaching the opened or closed position, the factory set the menu J1 to adjust the stop reaction distance after the motor is in opened and closed limit. 3. The control board support to work with NO and NC limit switch, and can set the limit switch mode of NO and NC mode through the digital display menu. 4. The control board can switch the limit direction by the digital display menu. When the menu show “Lr” means the limit switch detect a bug (limit error). Please check whether the limiter is damaged or in poor contact, or whether the normally open and normally closed mode (menu F0) set by the system does not match the actual limit switch type.
Safety beam mode	Set safety beam mode by menu, the default mode is 1, it is normal open mode. 1. While the gate is closing, trigger the Ph port, gate will reverse back to open. 2. If set the auto-closing timer after fully opening, after the safety beam signal is gone, the gate will be auto-closed. 3. If the safety beam signal exists, the gate closing action will not be executed and the auto-closing timer after fully opening will always be reset.
Auto-closing timer for fully opening	1. The auto-closing function is only triggered after the gate is fully opened. 2. Set auto-closing timer for fully opening through the digital display menu. 3. When auto-closing timer start to countdown, the STATE LED will flash one time each second. 4. When the gate is fully opened and in the countdown for closing, there is a button on the remote control is used to cancel theauto-closing command, the user can operate it to cancel the auto-closing timer. Note: Cancellation only cancels this time, and the gate can be auto-closing next time when it is fully opened.
Flash lamp mode	Set the lamp work mode through the digital display menu. Mode 0: Flashing light and motor will operate and stop at the same time. Mode 1: Flashing light will turn off 30 seconds after the motor stop. NOTE: No matter you choose the mode 0 or mode 1, when the gate is on the auto-closing timer countdown statue, the lamp also will light on.
Maximum motor working time protection	If motor running with a high speed and more than 90s or running with a slow speed and more than 30s, the motor will stop running for protection.
Setting of start terminal	Set start terminal with different function through the menu. 0: Open-Stop-Close.....(factory default) 1: Pedestrian Open-Stop-Close. 3: Close only. 2: Open only. 4: Stop only

Setting of open terminal	Set the open terminal with different function through the menu. 0: Open-Stop-Close... 1: Pedestrian Open-Stop-Close... 3: Close only. 2: Open only.(factory default) 4: Stop only.
Setting of close terminal	Set the close terminal with different function through the menu. 0: Open-Stop-Close... 1: Pedestrian Open-Stop-Close.... 3: Close only.(factory default) 2: Open only. 4: Stop only
Setting of card terminal	Set the swipe card terminal with different function through the menu. 0: Open-Stop-Close..... 2: Open only.(factory default) 1: Pedestrian Open-Stop-Close... 3: Close only. 4: Stop only. After operating the mode 2 to open the gate fully, gate will trigger the auto-closing timer after swiping card. Set the auto-closing timer for swiping card through the menu.
Pedestrian mode	The remote button and Pedestrian terminal can trigger the Pedestrian mode, the gate will partially open then stop, not fully open. The mode is convenient for user walking in and out. The pedestrian mode work with " open-stop-close..." Set the Pedestrian mode timer and auto-closing timer for Pedestrian mode through the menu.
Upgrade control board system by USB device	1. Before you upgrade the system, please confirm the U disk document is FAT32 or not. If not, please format the U disk as FAT32. 2. Copy the upgrade file into root directory of the U disk and name it EGB-18.bin. 3. Insert the U disk into the upgrade module, and then connect the upgrade module to the USB port. 4. Enter the menu, select the PU and set 5, and confirm. At this time, the system will restart, the digital tube will display UP, and the upgrade will begin. After the upgrade is completed, it will restart automatically.

Control Board Parameters Setting

- Press and hold the [FUN] button for 3 seconds, and the digital display will indicate "A0", then release the button, now the menu can be set to **[INC+]** and **[DEC-]** for increasing and decreasing numbers or values.
- After adjusting the value, press the **[FUN]** button to store the data, and the buzzer will beep one time to show the store successfully.
- After the menu setting is finished, press the **[LEARN]** button to exit the menu setting and close the display.

Item	Function description	Value	Factory default	Explanation
A0	Opening overcurrent setting in high speed	0-20 level	10	Opening overcurrent setting in high speed, the bigger the value is, the harder the motor to stop. Setting value from 0-20.
A1	Closing overcurrent setting in high speed	0-20 level	10	Closing overcurrent setting in high speed, the bigger thevalue is, the harder the motor to stop. Setting value from0-20.
A8	Overcurrent sensitivity	0-3 level	0	The bigger the value is, the longer the overcurrent sensing time is. Setting value from 0-3.

Item	Function description	Value	Factory default	Explanation
A9	Overcurrent reaction	0-3	0	Setting overcurrent reaction of gate: 0: Reverse back to the end. 1: Reverse back 1 second and stop. 2: Reverse back 3 seconds and stop. 3: Stop.
b0	Setting slow speed running time for opening	0-5 level	2	Used for setting the slow speed running time of the gate opening, gate will run in slow speed within this setting, then change to high speed with its rest travel. Setting from 0-5 seconds.
b1	Setting slow speed running time for closing	0-5 level	2	Used for setting the slow speed running time of the gateclosing, gate will run in slow speed within this setting, then change to high speed with its rest travel. Setting from 0-5 seconds.
C0	Auto-closing timer for fully opening	0-99s	0	Setting from 0-99 seconds. 0 means No auto-closing for fully opening.
C1	Auto-closing timer for swipe card	0-99s	0	Setting from 0-99 seconds. 0 means No auto-closing for swipe card triggering.
E0	Pedestrian mode	0-15s	6	0 means No pedestrian mode.
E1	Auto closing timer for pedestrian mode	0-99s	0	0 means No auto-closing for pedestrian mode
F0	Limit switch mode	0-1	1	0： NC mode. 1： NO mode.
F1	Switch the limit direction	0-1	0	0: Default direction. 1: Switch direction.
F2	Safety beam mode	0-1	1	0： NC mode. 1： NO mode.
F3	Flash Lamp Mode	0-1	0	0: Flashing light and motor will operate and stop at the same time. 1: Flashing light will turn off 30 seconds after the motor stop.
G0	Setting of start terminal	0-4	0	0: Open-stop-close... 1: Pedestrian mode open-stop-close... 2: Open only. 3: Close only. 4: Stop only.
G1	Setting of card terminal	0-4	2	0: Open-stop-close... 1: Pedestrian mode open-stop-close... 2: Open only. 3: Close only. 4: Stop only.
G2	Setting of open terminal	0-4	2	0: Open-stop-close... 1: Pedestrian mode open-stop-close... 2: Open only. 3: Close only. 4: Stop only.
G5	Setting of close terminal	0-4	3	0: Open-stop-close... 1: Pedestrian mode open-stop-close... 2: Open only. 3: Close only. 4: Stop only.
J1	Stop reaction distance in opened or closed limit	0-5	0	Setting from 0-5. The bigger the value is, the more abruptly the gate will stop.
J2	Switch the motor operation direction	0-1	0	0: Default direction. 1: Switch direction

Item	Function description	Value	Factory default	Explanation
L1	Button A function (Remote control)	0-6	1	0: No function. 1: Open-stop-close... 2: Pedestrian mode. 3: Open only. 4: Close only. 5: Stop only. 6: Turn auto close off via remote.
L2	Button B function (Remote control)	0-6	0	0: No function. 1: Open-stop-close... 2: Pedestrian mode. 3: Open only. 4: Close only. 5: Stop only. 6: Turn auto close off via remote.
L3	Button C function (Remote control)	0-6	0	0: No function. 1: Open-stop-close... 2: Pedestrian mode. 3: Open only. 4: Close only. 5: Stop only. 6: Turn auto close off via remote.
L4	Button D function (Remote control)	0-6	0	0: No function. 1: Open-stop-close... 2: Pedestrian mode. 3: Open only. 4: Close only. 5: Stop only. 6: Turn auto close off via remote.
Pr	Trigger auto travelling learning	0-10	0	Setting from 0-10. Set 5 will trigger the auto travel learning. 0 means No auto travel learning.
Pu	Upgrade the system by USB device	0-10	0	Setting from 0-10. Set 5 will trigger to upgrade the system. 0 means No upgrade the system.
Po	Factory reset	0-10	0	Setting from 0-10. Set 5 will trigger to reset operation. 0 means No reset.

Control Board Digital Display Information Show

1. When the gate is start to open, the digital display will show **“OP”**
2. When the gate is start to close, the digital display will show **“CL”**
3. After the gate stop moving, the digital display will show **“--”**
4. When the gate moves to the full open limit, the digital display will show **“LO”**
5. When the gate moves to the full close limit, the digital display will show **“LC”**
6. When the PED mode is activated, the digital display will show **“PD”**
7. After the motor trigger the overload protection, the digital display will show **“OH”**
8. After the photocell is activated, the digital display will show **“PH”**
9. After the loop is activated, the digital display will show **“LP”**
10. When the limit switch broken or has a bug, the digital display will show **“Lr”**
11. Cancel the auto-closing, the digital display will show **"CC"**

How to Operate the Gate Opener

Remote control operation instruction

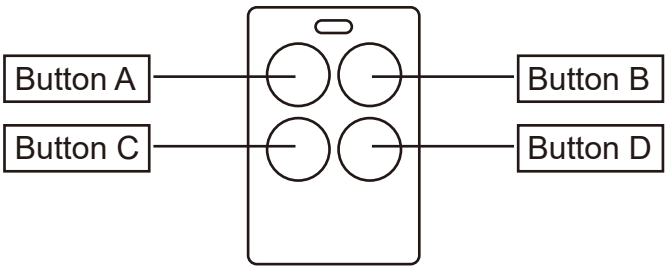

Each remote has 4 buttons, the factory default button A will operate the gate opener with open - stop - close... and other buttons are no function. If you want to reset the button's function, please follow the control board parameters setting in the page 19

Smart Gate Opener Operation Instruction

Search "XHouse IOT" and download it from Google play or App Store

FOR Android & IOS

Or scan this QR code for download APP "Xhouse IOT" and install it. Register the account for "Xhouse IOT" and log in.

- **Add the device**

Step 1. Power on the device, open the APP. Press the "⊕" on the top right corner to add the device, then select the " Sliding Gate " which has a orange cycle on the top right corner. (Fig 1 and 2)

★ If there has a gray cycle on the top right corner, that means the device already be added. The user need to press and hold the "Dec/Smart" button for about 5s on the control board, then repeat the step 1.

★ If there has a message "Please enter distribution network mode and add devices", the user need to press and hold the "Dec/Smart" button for about 5s on the control board, then repeat the step 1.

Step 2. Select the Wi-Fi, click the "Connect" and enter the password.(Fig 3) (If there hasn't Wi-Fi can be connected, the user also can select the " Bluetooth Add " and use the Bluetooth function to control the gate nearly. Please follow the step 4).

Step 3. Add the device successfully. The user can modify the name of the device and button from the "⚙"on the top right corner. (Fig 5)

Step 4: Bluetooth Add: When using Bluetooth mode control, the mobile app must be close to the device within Bluetooth range to connect and control, and only one user's phone can be connected at a time. (Fig. 3 and 4).

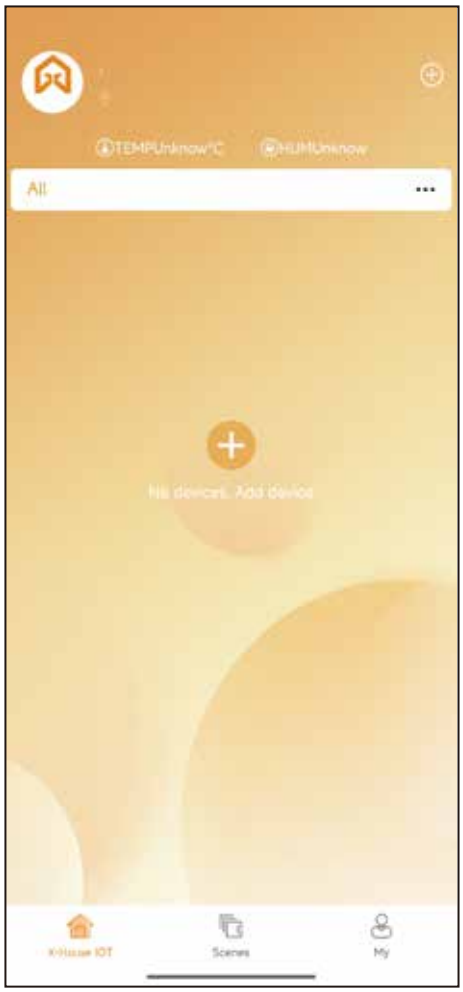

Fig 1

Fig 2

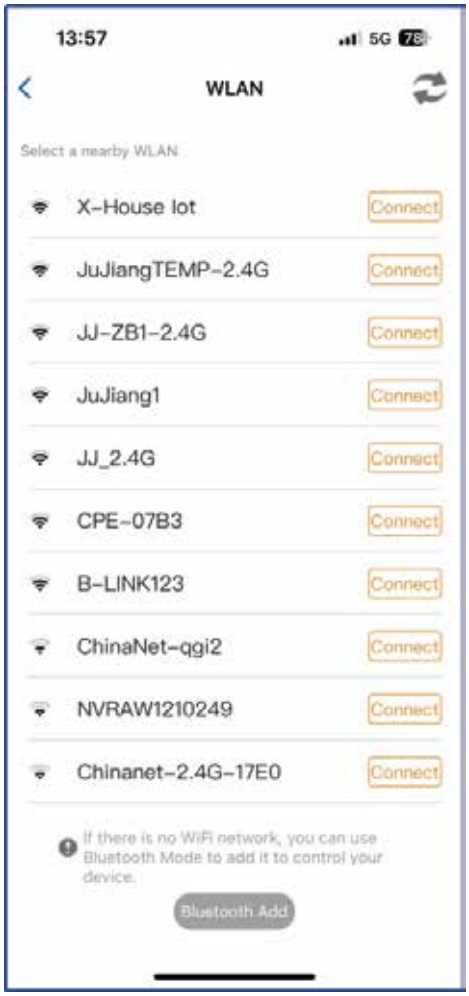

Fig 3

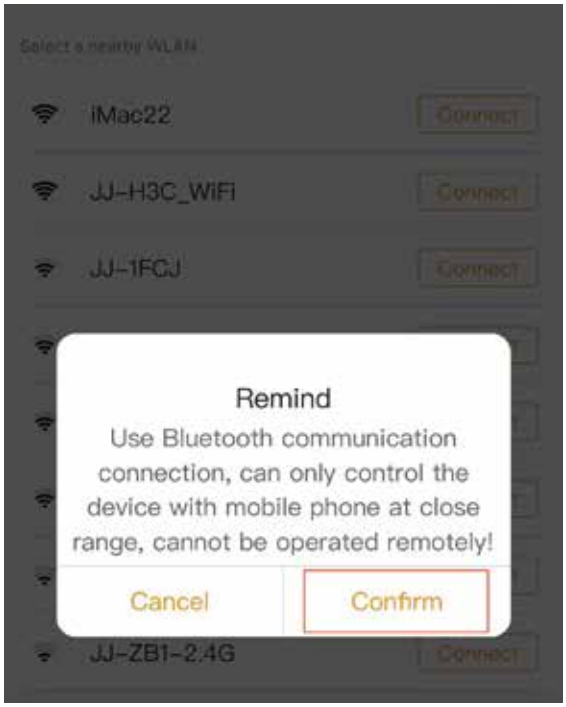

Fig 4

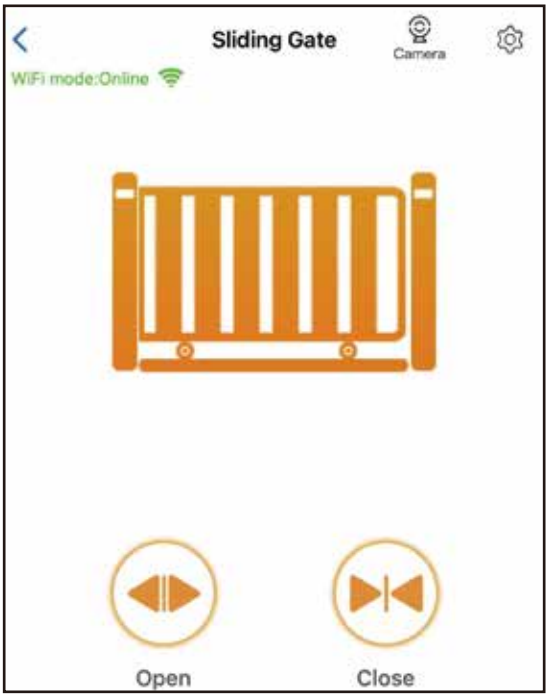

Fig 5

● Device supports WIFI and bluetooth working mode

★ When the device is connected to WiFi network successfully, it supports remote control and settings the device through the mobile phone APP.（Fig 5）

★ When the device is offline or the mobile phone has no network, if the user is nearly the device within 10 meters, and open the APP, it will automatically switch to the Bluetooth mode to control the device. (Fig 6)

★ The device will establish a Bluetooth connection with the mobile phone to achieve close-range Bluetooth control (only one user's mobile phone can establish a Bluetooth connection at the same time)

Fig 5

Fig 6

● **Switch WiFi network or bluetooth mode**

If the user need to switch to use a new WiFi network or want to switch control mode from the Bluetooth mode to WiFi mode, please follow the steps.

Step 1. Select the device, press the “⚙”on the top right corner. Click the “ Set/Modify WiFi ”. (Fig 7)

Step 2. Select the new WiFi and connect it. And click the “Refresh”. (Fig 8)

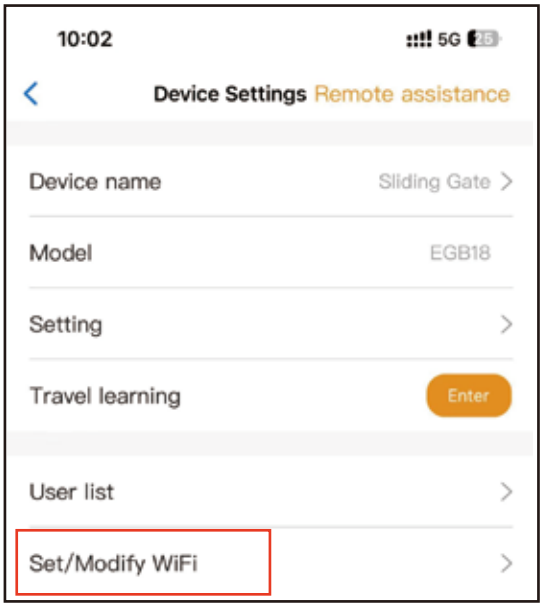

Fig 7

Fig 8

● Share the device

Step 1. Open the APP, select the device. Press the "⚙" on the top right corner, then select to " Sharing device ", w ill create a QR code. (Fig 9)

Step 2. The new user download the APP and open it, Press the "Scan" on the top right corner to scan the QR code. (Fig 10)

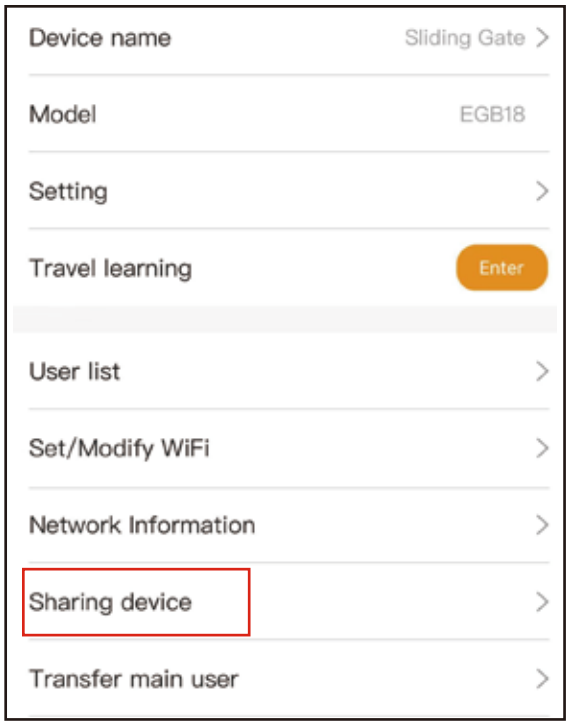

Fig 9

Fig 10

● Device settings

The user can set the parameters from the APP for the control board.

Step 1. Select the device, press the "⚙"on the top right corner. Click the " Setting ". (Fig 11)

Step 2. Set the parameters on the APP. (Fig 12)

Note: While the user want to set the parameters, the device must connect with the Wi-Fi. If not, the user need to use the Bluetooth function and put the phone app as close as the device to set the parameters. After done, please click the "Sync" button.

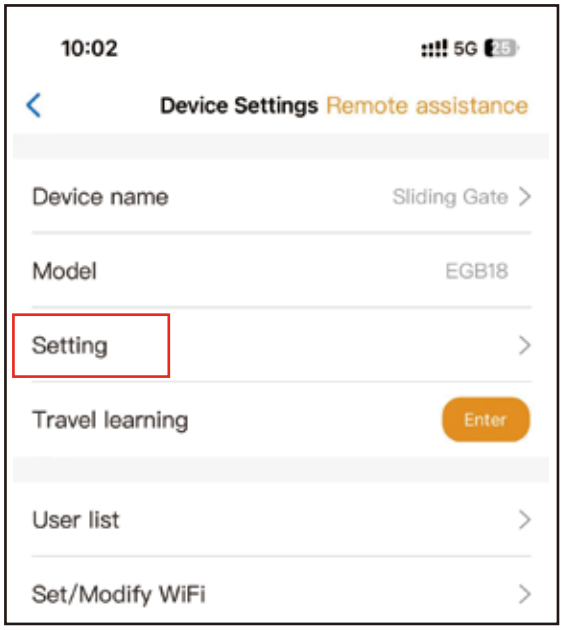

Fig 11

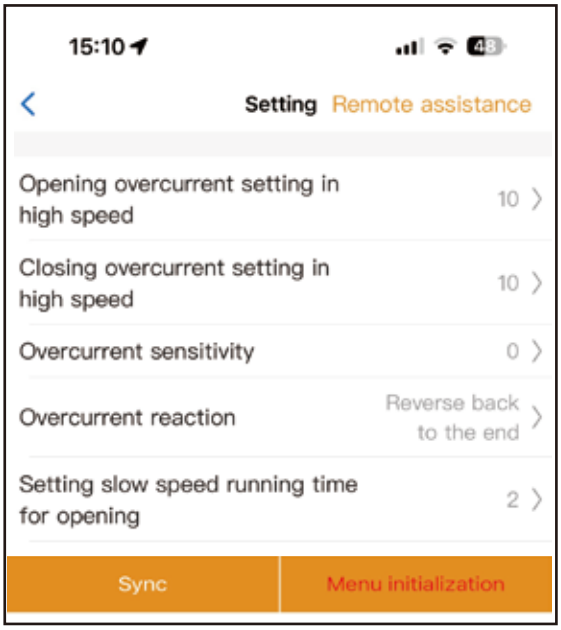

Fig 12

● **Setting Remote control button function**

The user can set the remote button function on the APP for the control board.

Step 1. Select the device, press the “ ⚙ ” on the top right corner. Click the “ Setting ”.

Step 2. Select the “Set remote control button ” on the APP.

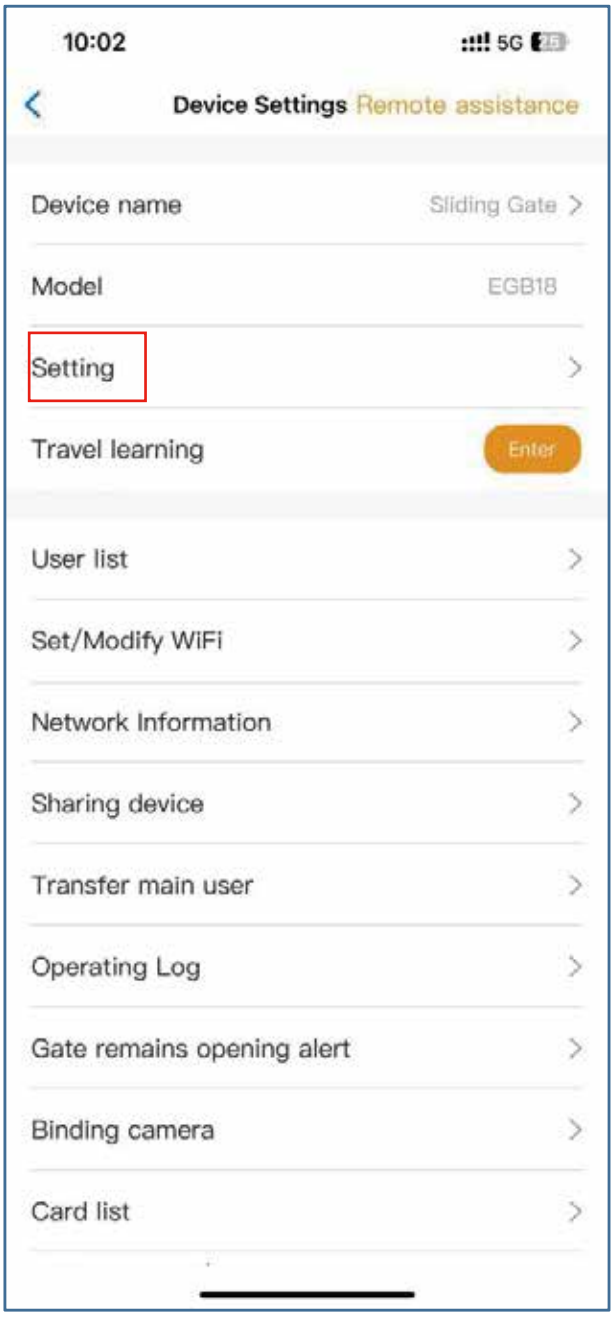

Fig 13

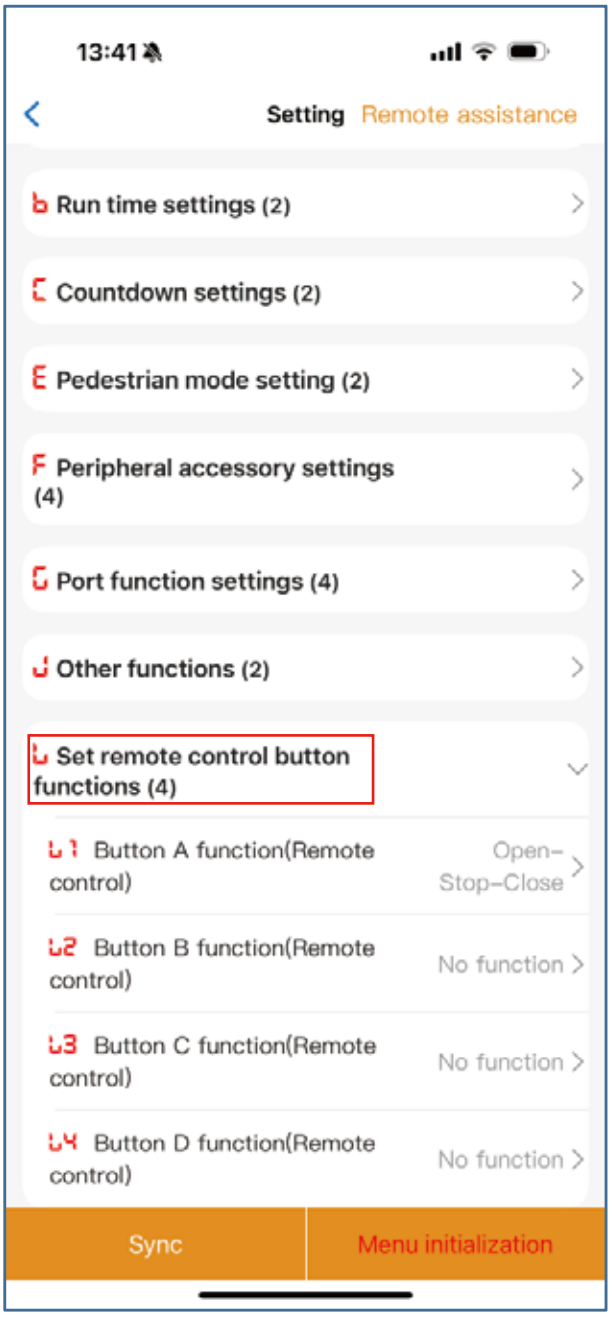

Fig 14

● Apply to be engineer

When your customer's equipment fails, you can solve the problem by "Remote Assistance". So you need to apply to be engineer on the APP first. Click the "My" in the bottom of the APP, select "Apply to be engineer", enter the information to "Confirm application".

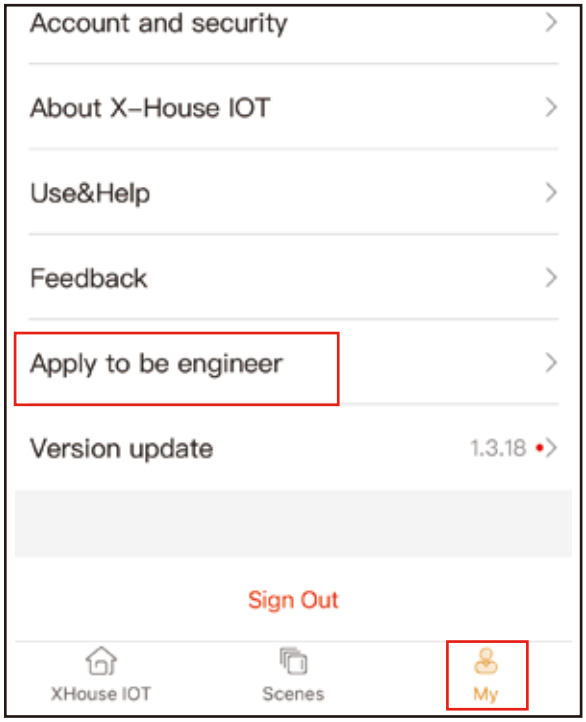

Fig 15

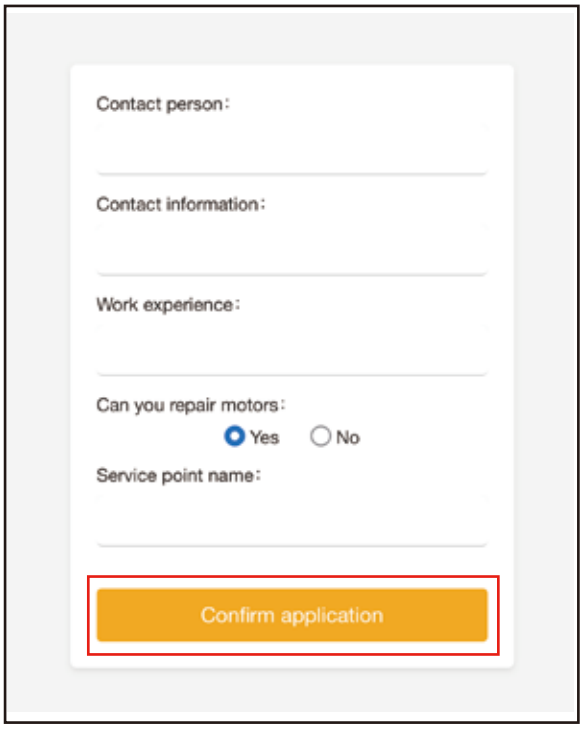

Fig 16

● Remote assistance

When your equipment fails, the parameter settings need to be readjusted. At this time, you can directly initiate the "Remote Assistance" button and share the QR code or verification code with your installation service provider for the remote service.

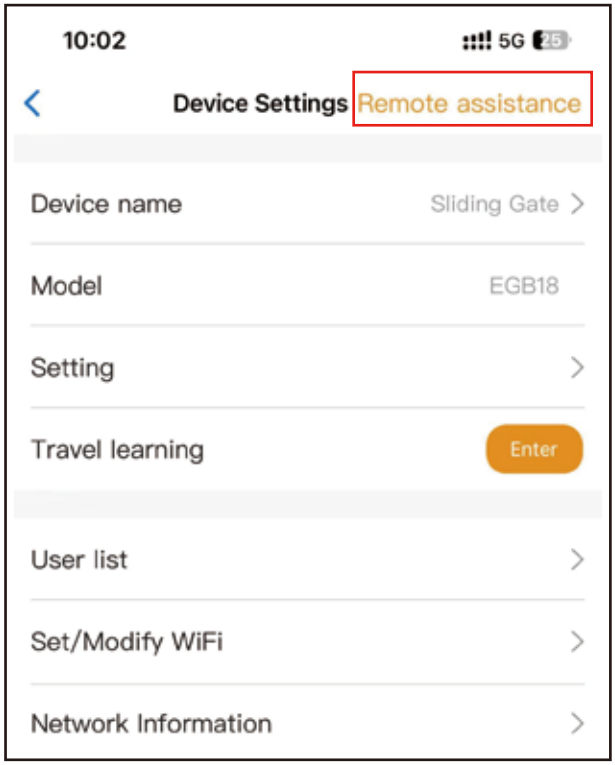

Fig 17

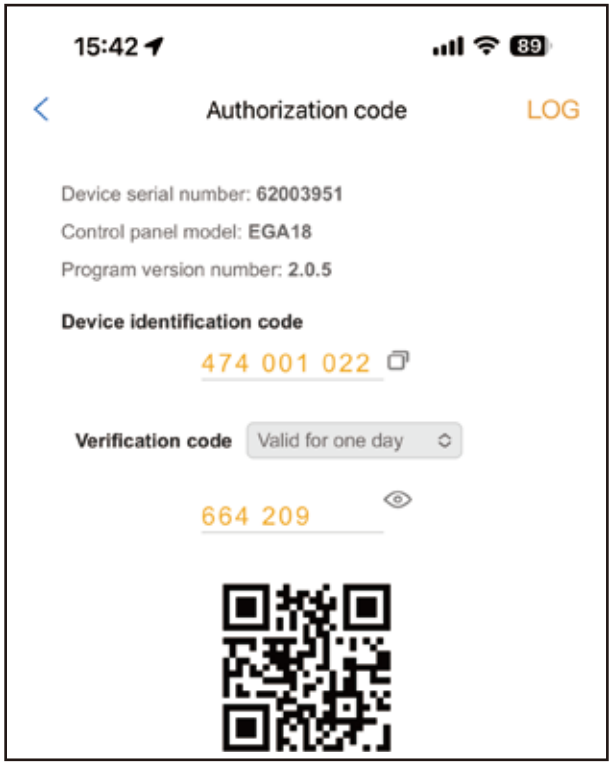

Fig 18

● Add USB card / RF remote control off site

When the user need to add a RF remote control or a USB card to open the gate, you can use the " Add USB card / RF remote off site " function to do it, and scan the QR code from the remote control or enter the ID number for the USB card. Don't need to open the control box to program them.

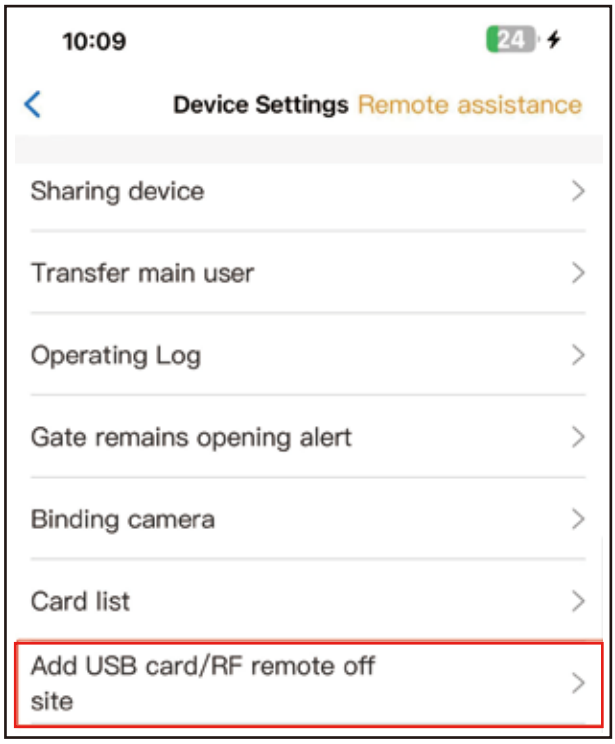

Fig 19

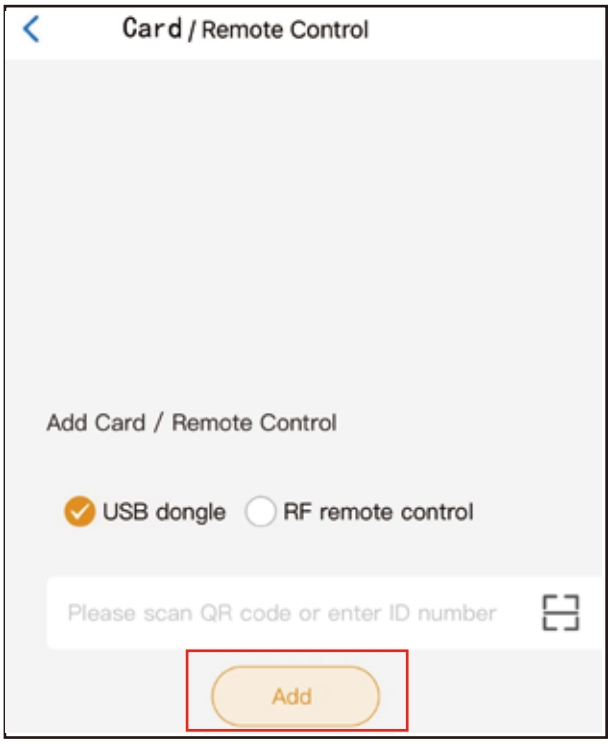

Fig 20

● Add USB card/RF remote at site

When the user needs to add an RF remote control or USB proximity card to open the door, you can directly use the "Add USB card/RF remote at site" function, click the "Learn" button, and click " Start Learning ". Don't need to open the control box, and the control board will enter the code learning state, and then press the remote control button or power on the USB card to transmit a signal.

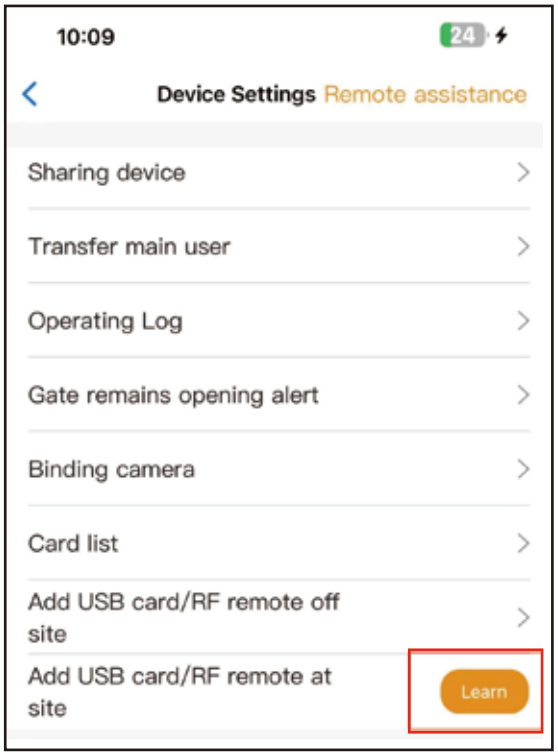

Fig 21

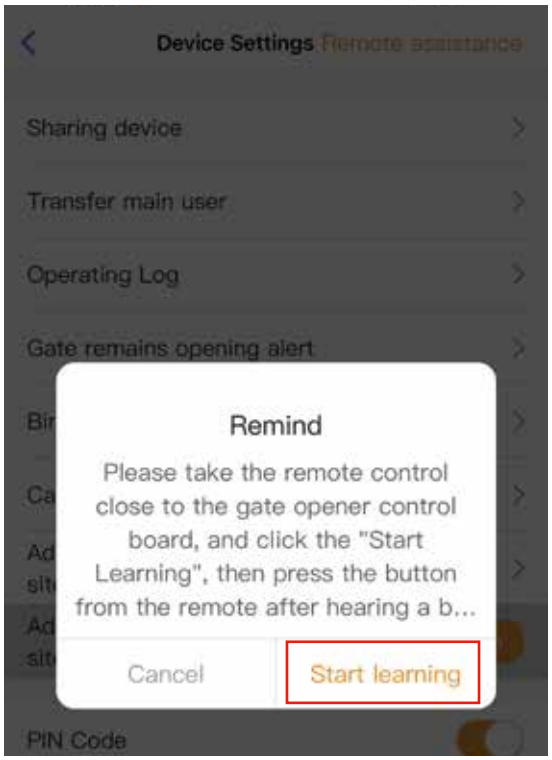

Fig 22

● Management of the USB card and RF remote control

The card list can management your USB card and RF remote control. The user can sync all the cards and remotes to the card list for management, and delete it when they are no longer needed or lost.

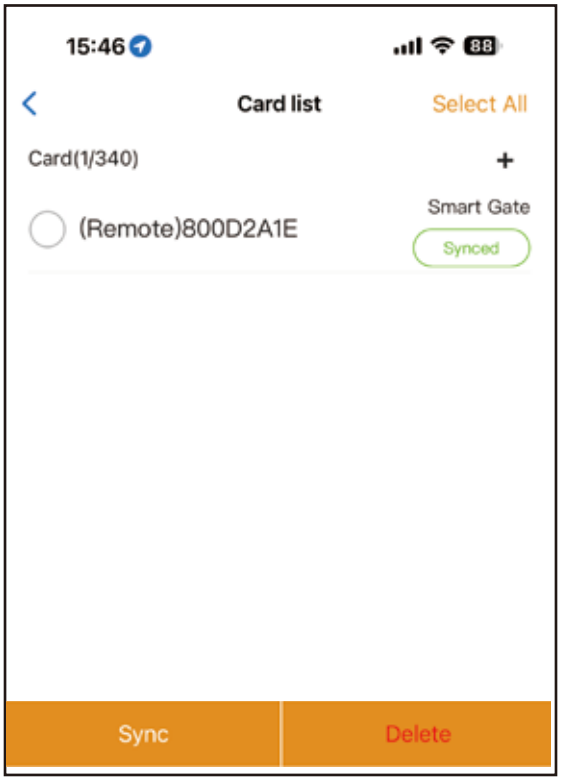

Fig 23

● Binding with camera

Step 1. Open the APP, select the device. Press the "⚙" on the top right corner, then select to " Binding camera ".

Step 2. Select the " IP camera ", and press the " confirm ".

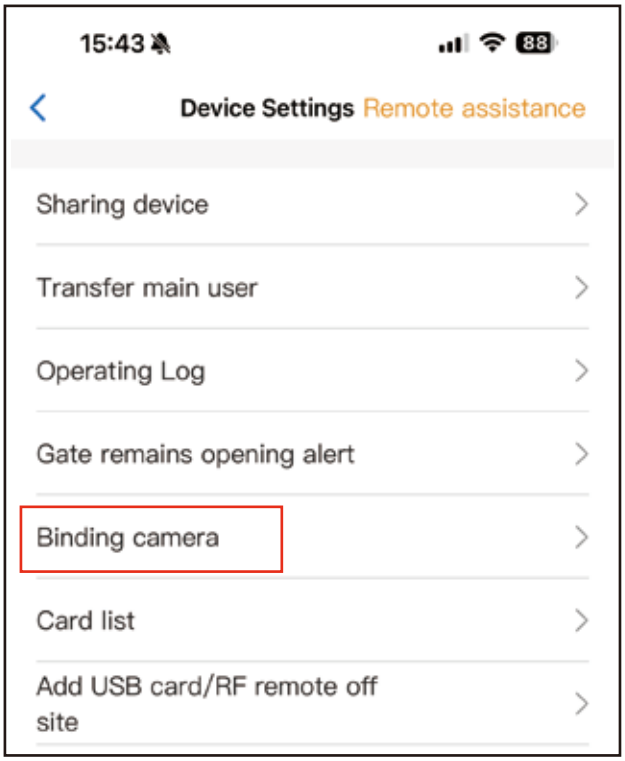

Fig 24

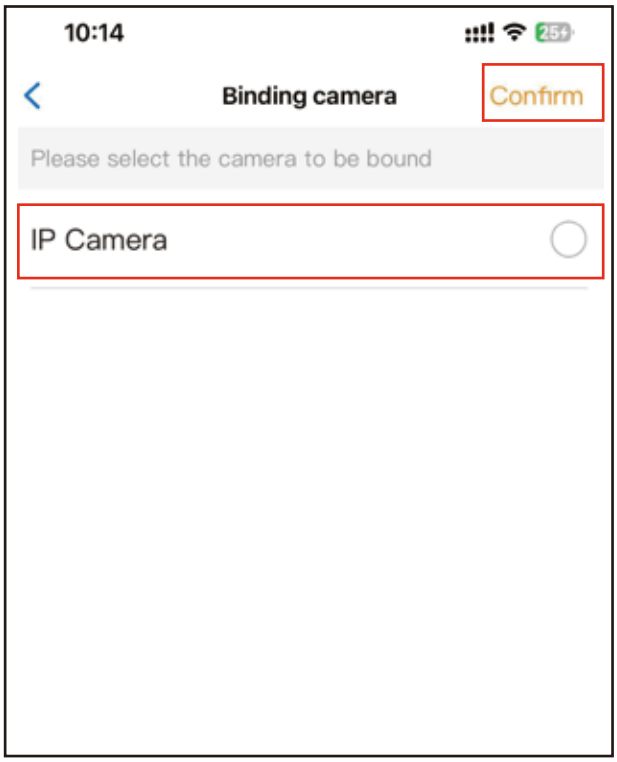

Fig 25

Trouble Shooting

Problems	Possible Causes	Usual Solutions
Gate fails to open or close normally	Check the clutch states, power-driven state or not?	Recovery
	Power state LED no indication, and power trip.	Switch on the power supply to restore power.
	Fuse is burned.	Check the fuse, change the fuse if burnt.
	Remote control failure or invalid.	Test the remote again or order a new remote.
	There is a fault in the power wiring.	Power off, check the power wiring.
	Damage to any electrical component on the control board.	Have the problematic component replaced with a new identical one. If necessary, have the control board replaced.
The gate is opened but cannot close.	There is a fault in the motor wiring.	Power off, check the motor wiring.
	There is a fault in the photocell sensor wiring.	Power off, check the photocell sensor wiring.
	There is a fault in the photocell sensor mounting position or angle.	Make sure that the photocell mounting position can be mutually aligned.
	Photocell sensor is blocked by objects.	Remove the obstacle.
	Overcurrent value is small.	Increase the overcurrent value.
Remote control doesn’t work	Battery level of the remote control is low.	Change the remote controlbattery.
	Program remote control isn’t successfully.	Program the remote again.
Working distance of remote control reduced	Interference from surrounding environment.	Straighten the control board Antenna.
	Interference from equipment using the same frequency.	Wait eliminate interference.
Press OPEN or CLOSE button, the gate is not moving, motor has noise	Capacitor is broken.	Change capacitor.
	Capacitor is poor connected.	Check the capacitor wiring. Reconnect the capacitorinterface and tighten it with ascrewdriver.
	Gate moving is not smoothly.	According to the actual situation to adjust the motor or the gate.

Problems	Possible Causes	Usual Solutions
Gate fails to stop in the opened or closed position.	The mounting position of magnetic limit switch with problem.	Check whether the distance between magnetic limit switch and motor, and the height of the magnetic limit switch can reach up the mounting requirement.
	There is a fault in the limit switch wiring.	Limit switch of the motor and the limit detection of the interface PCB board plug off, insert and fixed them.

Product Name	**Sliding Gate Operator**
Manufacturer	**Giant Alarm System Co.,Ltd**
Address	**CN-No. 37,Yangguang Road,Optoelectronic InformationIndustry Base, Quanzhou City, Fujian Province, China.**
Batch Number	**JD260204**
Date of manufacture	**Jan 2026**
TEL	**+86 13328529638**
E-mail	**smart03@x-house.net**
EC REP	**Name: Y & H S.R.L.**
	Address: Via Gravina 21 MT matera,Trani,Puglia
	E-mail: itlyhsrl@gmail.com

WARNUNG: **Vor Installation Anleitung lesen. Kinder & Haustiere fernhalten. Vor Wartung Netz trennen.**

ADVERTENCIA: **Lea el manual antes de instalar. Mantenga niños y mascotas alejados. Desconecte la corriente antes del mantenimiento.**

Made in China